SIEMENS

SIMOVERT MASTERDRIVES Vector Control

Betriebsanleitung
Operating Instructions

Wechselrichter (DC-AC) Bauform Kompakt
Inverter (DC-AC) Compact Type

Ausgabe / Edition: AB

475 844 4170 76 J AB-74

Diese Betriebsanleitung gilt für den Gerätesoftwarestand V 3.1.

Änderungen von Funktionen, technischen Daten, Normen, Zeichnungen und Parametern vorbehalten.

These Operating Instructions are valid for software release V 3.1.

We reserve the right to make changes to functions, technical data, standards, drawings and parameters.

Weitergabe sowie Vervielfältigung dieser Unterlage, Verwertung und Mitteilung ihres Inhalts nicht gestattet, soweit nicht ausdrücklich zugestanden. Zuwiderhandlungen verpflichten zu Schadenersatz. Alle Rechte vorbehalten, insbesondere für den Fall der Patenterteilung oder GM-Eintragung.

Wir haben den Inhalt der Druckschrift auf Übereinstimmung mit der beschriebenen Hard- und Software überprüft. Dennoch können Abweichungen nicht ausgeschlossen werden, so daß wir für die vollständige Übereinstimmung keine Garantie übernehmen. Die Angaben in dieser Druckschrift werden jedoch regelmäßig überprüft und notwendige Korrekturen sind in den nachfolgenden Auflagen enthalten. Für Verbesserungsvorschläge sind wir dankbar

SIMOVERT® ist ein Warenzeichen von Siemens

The reproduction, transmission or use of this document or its contents is not permitted without express written authority. Offenders will be liable for damages. All rights, including rights created by patent grant or registration of a utility model or design, are reserved.

We have checked the contents of this document to ensure that they coincide with the described hardware and software. However, differences cannot be completely excluded, so that we do not accept any guarantee for complete conformance. However, the information in this document is regularly checked and necessary corrections will be included in subsequent editions. We are grateful for any recommendations for improvement.

SIMOVERT® Registered Trade Mark

© Siemens AG 1998 All rights reserved

Contents

1 DEFINITIONS AND WARNINGS 1-1

2 DESCRIPTION 2-1

3 TRANSPORT, STORAGE, UNPACKING 3-1

4 TECHNICAL DATA 4-1

5 INSTALLATION 5-1

5.1 Installing the unit 5-1

5.2 Installing the optional boards 5-4

6 INSTALLATION IN CONFORMANCE WITH EMC REGULATIONS 6-1

7 CONNECTING-UP 7-1

7.1 Power connections 7-4
7.1.1 Terminal strip X9 (only for units with a rated input voltage of DC 510 - 650 V and DC 675 - 810 V) 7-6
7.1.2 Terminal strip X9 (only for units with a rated input voltage of DC 270 - 310 V) 7-7

7.2 Control connections 7-8

8 PARAMETERIZATION 8-1

8.1 Parameter input via the PMU 8-1

8.2 Parameter input via the OP1S 8-5

8.3 Parameterizing by download 8-8

9 PARAMETERIZING STEPS 9-1

9.1 Parameter reset to factory setting 9-3

9.2 Quick parameterization procedures 9-6
9.2.1 Parameterizing with user settings 9-6
9.2.2 Parameterizing by loading parameter files (download P060 = 6) 9-7
9.2.3 Parameterizing with parameter modules (quick parameterization, P060 = 3) 9-10

9.3 Detailed parameterization 9-32
9.3.1 Power section definition 9-32
9.3.2 Board configuration 9-34
9.3.3 Drive setting 9-37

9.4 Notes on parameterization 9-44
9.1.1 Drive setting according to process-related boundary conditions 9-46
9.1.2 Changes to the function selection parameter (P052) VC(former) 9-48

10 FIRST START-UP 10-1

11 FAULTS AND ALARMS 11-1

12 MAINTENANCE 12-1

12.1 Replacing the fan 12-2

12.2 Replacing the PMU 12-4

12.3 Replacing the DC link fuses 12-5

13 FORMING 13-1

14 ENVIRONMENTAL FRIENDLINESS 14-1

15 CERTIFICATES 15-1

1 Definitions and Warnings

Qualified personnel

For the purpose of this documentation and the product warning labels, a "Qualified person" is someone who is familiar with the installation, mounting, start-up, operation and maintenance of the product. He or she must have the following qualifications:

- Trained or authorized to energize, de-energize, ground and tag circuits and equipment in accordance with established safety procedures.
- Trained or authorized in the proper care and use of protective equipment in accordance with established safety procedures.
- Trained in rendering first aid.

DANGER

For the purpose of this documentation and the product warning labels, "Danger" indicates death, severe personal injury or substantial property damage will result if proper precautions are not taken.

WARNING

For the purpose of this documentation and the product warning labels, "Warning" indicates death, severe personal injury or property damage can result if proper precautions are not taken.

CAUTION

For the purpose of this documentation and the product warning labels, "Caution" indicates that minor personal injury or material damage can result if proper precautions are not taken.

NOTE

For the purpose of this documentation, "Note" indicates important information about the product or about the respective part of the documentation which is essential to highlight.

WARNING

Hazardous voltages are present in this electrical equipment during operation.

Non-observance of the warnings can thus result in severe personal injury or property damage.

Only qualified personnel should work on or around the equipment

This personnel must be thoroughly familiar with all warning and maintenance procedures contained in this documentation.

The successful and safe operation of this equipment is dependent on correct transport, proper storage and installation as well as careful operation and maintenance.

NOTE

This documentation does not purport to cover all details on all types of the product, nor to provide for every possible contingency to be met in connection with installation, operation or maintenance.

Should further information be desired or should particular problems arise which are not covered sufficiently for the purchaser's purposes, the matter should be referred to the local Siemens sales office.

The contents of this documentation shall not become part of or modify any prior or existing agreement, commitment or relationship. The sales contract contains the entire obligation of Siemens AG. The warranty contained in the contract between the parties is the sole warranty of Siemens. Any statements contained herein do not create new warranties or modify the existing warranty.

CAUTION

Components which can be destroyed by electrostatic discharge (ESD)

The board contains components which can be destroyed by electrostatic discharge. These components can be easily destroyed if not carefully handled. If you have to handle electronic boards, please observe the following:

Electronic boards should only be touched when absolutely necessary.

The human body must be electrically discharged before touching an electronic board.

Boards must not come into contact with highly insulating materials - e.g. plastic parts, insulated desktops, articles of clothing manufactured from man-made fibers.

Boards must only be placed on conductive surfaces.

Boards and components should only be stored and transported in conductive packaging (e.g. metalized plastic boxes or metal containers).

If the packing material is not conductive, the boards must be wrapped with a conductive packaging material, e.g. conductive foam rubber or household aluminium foil.

The necessary ESD protective measures are clearly shown again in the following diagram:

- a = Conductive floor surface
- b = ESD table
- c = ESD shoes
- d = ESD overall
- e = ESD chain
- f = Cubicle ground connection

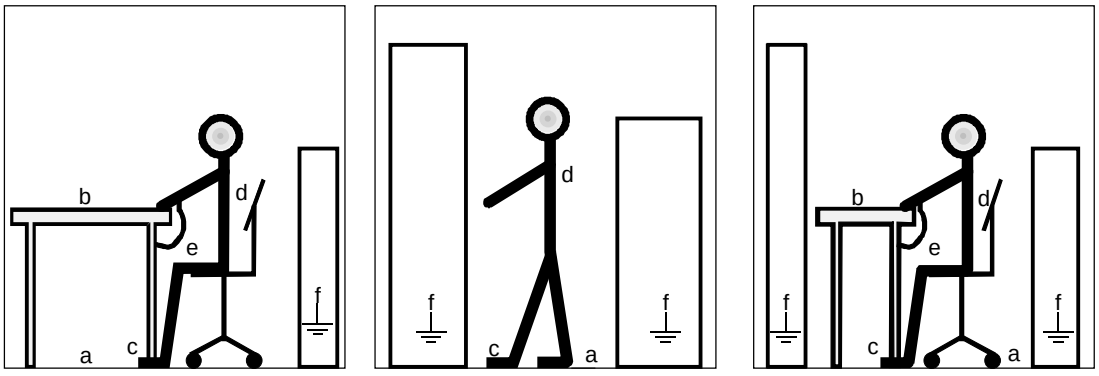

Fig. 1-1 ESD protective measures

Safety and Operating Instructions for Drive Converters

(in conformity with the low-voltage directive 73/23/EEC)

1. General

In operation, drive converters, depending on their degree of protection, may have live, uninsulated, and possibly also moving or rotating parts, as well as hot surfaces.

In case of inadmissible removal of the required covers, of improper use, wrong installation or maloperation, there is the danger of serious personal injury and damage to property.

For further information, see documentation.

All operations serving transport, installation and commissioning as well as maintenance are to be carried out **by skilled technical personnel** (observe IEC 364 or CENELEC HD 384 or DIN VDE 0100 and IEC Report 664 or DIN VDE 0110 and national accident prevention rules).

For the purposes of these basic safety instructions, "skilled technical personnel" means persons who are familiar with the installation, mounting, commissioning and operation of the product and have the qualifications needed for the performance of their functions.

2. Intended use

Drive converters are components designed for inclusion in electrical installations or machinery.

In case of installation in machinery, commissioning of the drive converter (i.e. the starting of normal operation) is prohibited until the machinery has been proved to conform to the provisions of the EC directive 89/392/EEC (Machinery Safety Directive - MSD). Account is to be taken of EN 60204.

Commissioning (i.e. the start of normal operation) is admissible only where conformity with the EMC directive (89/336/EEC) has been established.

The drive converters meet the requirements of the low-voltage directive 73/23/EEC. They are subject to the harmonized standards of the series prEN 50178/DIN VDE 0160 in conjunction with EN 60439-1/DIN VDE 0660 Part 500 and EN 60146/DIN VDE 0558.

The technical data as well as information concerning the supply conditions shall be taken from the rating plate and from the documentation and shall be strictly observed.

3. Transport, storage

The instructions for transport, storage and proper use shall be complied with.

The climatic conditions shall be in conformity with prEN 50178.

4. Installation

The installation and cooling of the appliances shall be in accordance with the specifications in the pertinent documentation.

The drive converters shall be protected against excessive strains. In particular, no components must be bent and/or isolating distances altered in the course of transportation or handling. No contact shall be made with electronic components and contacts.

Drive converters contain electrostatic sensitive components which are liable to damage through improper use. Electronic components must not be mechanically damaged or destroyed (potential health risks).

5. Electrical connection

When working on live drive converters, the applicable national accident prevention rules (e.g. VBG 4) must be complied with.

The electrical installation shall be carried out in accordance with the relevant requirements (e.g. cross-sectional areas of conductors, fusing, PE connection). For further information, see documentation.

Instructions for the installation in accordance with EMC requirements, such as screening, grounding, location of filters and wiring, are contained in the drive converter documentation. They must always be complied with, also for drive converters bearing a CE marking. Observance of the limit values required by the EMC law is the responsibility of the manufacturer of the installation or machine.

6. Operation

Installations which include drive converters shall be equipped with additional monitoring and protective devices in accordance with the relevant applicable safety requirements, e.g. Act respecting technical equipment, accident prevention rules, etc. Changes to the drive converters by means of the operating software are permissible.

After disconnection of the drive converters from the voltage supply, live appliance parts and power terminals must not be touched immediately because of possibly energized capacitors. In this regard, the corresponding signs and markings on the drive converter must be respected.

During operation, all covers and doors shall be kept closed.

7. Maintenance and servicing

The manufacturer's documentation shall be followed.

Keep these safety instructions in a safe place!

2 Description

Range of application

The inverter is a power electronics component for feeding three-phase drives in the output range from 2.2 kW to 37 kW.

The unit can be operated from a DC system with a voltage in the range of the values indicated on the rating plate (270...310 / 510...650 / 675...810 V).

The inverter enables a three-phase system with a variable output frequency between 0 Hz and a maximum of 600 Hz to be generated from the DC link voltage with the pulse width modulation method (PWM).

The internal 24 V DC voltage is supplied through an integral power supply unit.

The unit is controlled by the internal closed-loop control electronics, the functions are provided by the unit software.

Operator control is via the PMU operator control panel, the user-friendly OP1S operator contol panel, the terminal strip or via the serial interfaces of a bus system. For this purpose, the unit is provided with a number of interfaces and six slots for the use of optional boards.

Pulse encoders and analog tachometers can be used as encoders on the motor.

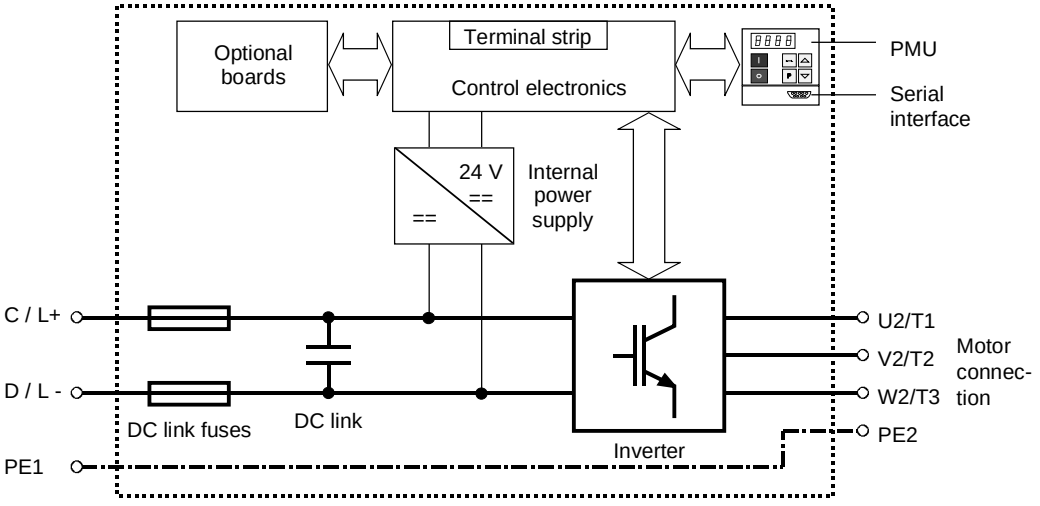

Fig. 2-1 Circuit principle of the inverter

NOTE

With option L33 "Compact unit without DC fuses" the DC fuses are replaced by conductive connections.

3 Transport, Storage, Unpacking

The units and components are packed in the manufacturing plant corresponding to that specified when ordered. A packing label is located on the outside of the packaging. Please observe the instructions on the packaging for transport, storage and professional handling.

Transport

Vibrations and jolts must be avoided during transport. If the unit is damaged, you must inform your shipping company immediately.

Storage

The units and components must be stored in clean, dry rooms. Temperatures between -25 °C (-13 °F) and +70 °C (158 °F) are permissible. Temperature fluctuations must not be more than 30 K per hour.

NOTE

If the storage period of one year is exceeded, the unit must be newly formed. See Section ”Forming".

Unpacking

The packaging comprises board and corrugated paper. It can be disposed of corresponding to the appropriate local regulations for the disposal of board products.The units and components can be installed and commissioned after they have been unpacked and checked to ensure that everything is complete and that they are not damaged.

4 Technical Data

EU low-voltage directives 73/23/EEC and RL93/68/EEC	EN 50178
EU directive EMC 89/336/EEC	EN 61800-3
EU machine directive 89/392/EEC	EN 60204-1
Approval	UL: E 145 153 CSA: LR 21 927
Type of cooling	Air cooling with built-in fan
Permissible ambient and cooling-medium temperature: • during operation • during storage • during transport	 0° C to +40° C (32° F to 104° F) (up to 50° C see Fig. „Derating curves“) -25° C to +70° C (-13° F to 158° F) -25° C to +70° C (-13° F to 158° F)
Installation altitude	≤ 1000 m above sea level (100 % load capability) > 1000 m to 3400 m above sea level (for load capability. see Fig. „Derating curves“)
Permissible humidity rating	Relative humidity ≤ 95 % during transport and storage ≤ 85 % during operation (moisture condensation not permissible)
Climatic class	Class 3K3 to DIN IEC 721-3-3 (during operation)
Degree of pollution	Pollution degree 2 to IEC 664-1 (DIN VDE 0110. Part 1). Moisture condensation during operation not permissible
Overvoltage category	Category III to IEC 664-1 (DIN VDE 0110. Part 2)
Degree of protection	IP20 EN 60529
Class of protection	Class 1 to EN 536 (DIN VDE 0106. Part 1)
Shock protection	to EN 60204-1 and DIN VDE 0106 Part 100 (VBG4)
Radio interference suppression • Standard • Options	to EN 61800-3 No radio interference suppression Radio interference suppression filter for Class B1 or A1 to EN 55011
Interference immunity	Industrial to EN 61800-3
Paint finish	For interior installation
Mechanical specifications - Vibrations During stationary use: Constant amplitude • of deflection • of acceleration During transport: • of deflection • of deflection - Shocks - Drop and topple	 to DIN IEC 68-2-6 0.075 mm in the frequency range 10 Hz to 58 Hz 9.8 m/s² in the frequency range > 58 Hz to 500 Hz 3.5 mm in the frequency range 5 Hz to 9 Hz 9.8 m/s² in the frequency range > 9 Hz to 500 Hz to DIN IEC 68-2-27 / 08.89 30 g. 16 ms half-sine shock to DIN IEC 68-2-31 / 04.84 on a surface and on a corner

Table 4-1 General data

NOTE

Complete fulfilment of the degree of protection IP20 in accordance with EN 60529 is dependent on how many incoming and outgoing control cables cover the opening area on the lower section of the unit. If degree of protection IP20 also has to be met in operation, the opening may have to be subsequently reduced.

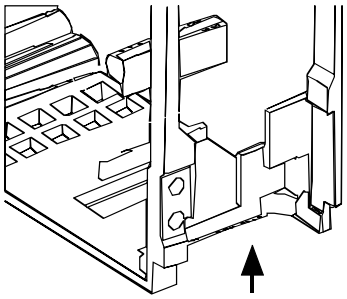

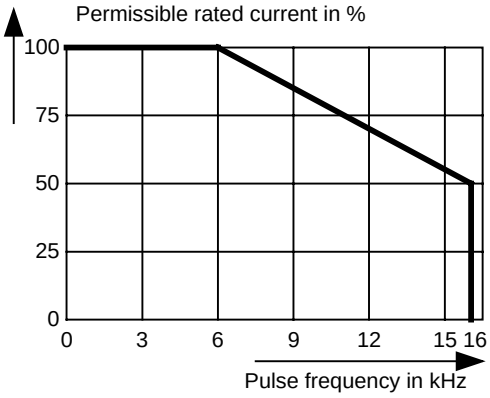

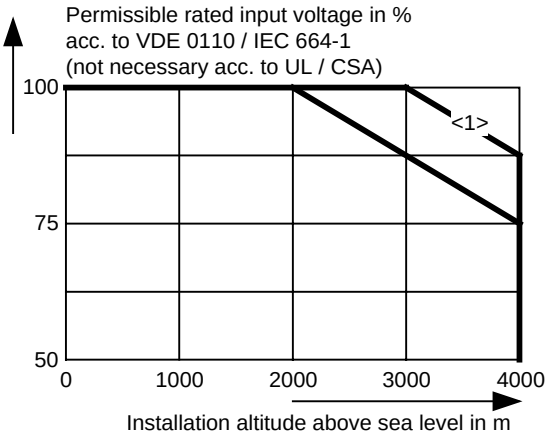

<1>
The more favourable derating curve only applies to units of sizes B to D at a rated input voltage of 510 - 540 V

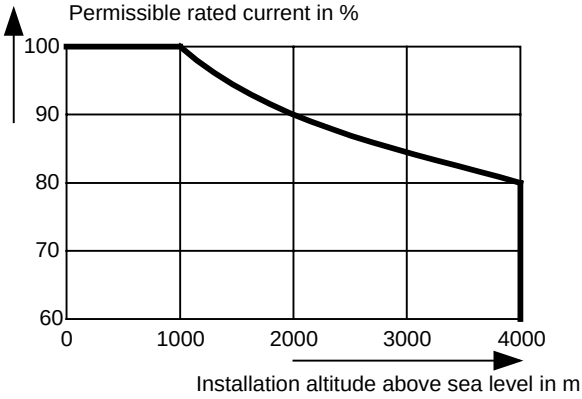

Altitude [m]	Derating factor K_1
1000	1,0
2000	0,9
3000	0,845
4000	0,8

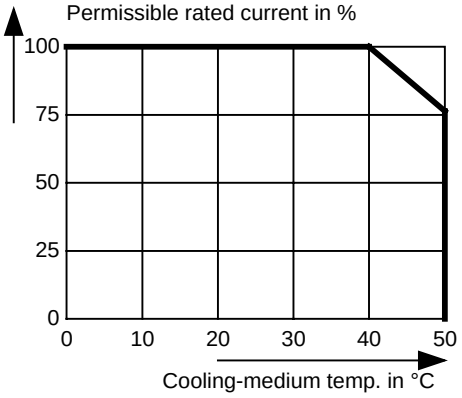

Temp [°C]	Derating factor K_2
50	0,76
45	0,879
40	1,0
35	1,125 *
30	1,25 *
25	1,375 *

* See the following Note

Fig. 4-1 Derating curves

The derating of the permissible rated current for installation altitudes of over 1000 m and at ambient temperatures below 40 °C is calculated as follows:

Total derating = $\text{Derating}_{\text{altitude}}$ x $\text{Derating}_{\text{ambient temperature}}$

$K = K_1 \times K_2$

NOTE

It must be borne in mind that total derating must **not be greater** than 1!

Example: Altitude: 3000 m $K_1 = 0.845$
Ambient temperature: 35 °C $K_2 = 1.125$
$\Rightarrow$ Total derating = 0.845 x 1.125 = 0.95

Designation	Value					
Order No. 6SE70...	21-1RA60	21-3RA60	21-8RB60	22-3RB60	23-2RB60	24-4RC60
Rated voltage [V]						
• Input	DC 270 (- 10 %) to 310 (+ 15 %)					
• Output	3 AC 0 to rated DC voltage x 0.75					
Rated frequency [Hz]						
• Input	---					
• Output: V/f = constant	0 to 600					
V = constant	8 to 300					
Rated current [A]						
• Input	12.6	15.8	21.1	27.3	38.3	52.6
• Output	10.6	13.3	17.7	22.9	32.2	44.2
DC link voltage [V]	= rated DC voltage					
Rated output [kVA]	3.7 to 4.2	4.7 to 5.2	6.0 to 6.9	8.0 to 9.1	11.2 to 12.8	15.4 to 17.6
Auxiliary current supply [V]	DC 24 (20 - 30)					
• Max. aux. curr. requirement[A] Standard version at 20 V	1.5					
• Max. aux. curr. requirement[A] Maximum version at 20 V	2.5					
Pulse frequency [kHz]	1.5 to 16 (see Fig. „Derating curves“)					
Load class II to EN 60 146-1-1						
Base load current [A]	0.91 x rated output current					
Base load duration [s]	240					
Overload current [A]	1.36 x rated output current					
Overload duration [s]	60					
Load class II to EN 60 146-1-1 (additional)						
Base load current [A]	0.91 x rated output current					
Base load duration [s]	270					
Overload current [A]	1.6 x rated output current					
Overload duration [s]	30					
Losses, cooling, power factor						
Power factor conv. cosφC	< 0.92 ind.					
Efficiency η (Rated operation)	≥ 0.97	≥ 0.98	≥ 0.97	≥ 0.98		
Power loss (at 2.5 kHz) [kW]	0.09	0.11	0.13	0.17	0.22	0.29
Cooling-air requirement [m³/s]	0.009	0.009	0.022	0.022	0.022	0.028
Pressure drop Δp [Pa]	10	10	32	32	32	30
Sound pressure level, types of construction, dimensions, weights						
Sound pressure level [dB(A)]	60	60	60	60	60	60
Type of construction	A	A	B	B	B	C
Dimensions [mm]						
• Width	90	90	135	135	135	180
• Height	425	425	425	425	425	600
• Depth	350	350	350	350	350	350
Weight approx. [kg]	8.5	8.5	12.5	12.5	12.5	21

Table 4-2 Air-cooled inverter (part 1)

Designation	Value					
Order No. 6SE70...	25-4RD60	27-0RD60	28-1RD60			
Rated voltage [V] • Input • Output	DC 270 (- 10 %) to 310 (+ 15 %) 3 AC 0 to rated DC voltage x 0.75					
Rated frequency [Hz] • Input • Output: V/f = constant V = constant	--- 0 to 600 8 to 300					
Rated current [A] • Input • Output	64.3 54.0	82.1 69.0	96.4 81.0			
DC link voltage [V]	= rated DC voltage					
Rated output [kVA]	18.8 to 21.5	24.0 to 27.4	28.1 to 32.2			
Auxiliary current supply [V]	DC 24 (20 - 30)					
• Max. aux. curr. requirement[A] Standard version at 20 V	1.5					
• Max. aux. curr. requirement[A] Maximum version at 20 V	2.5					
Auxiliary current supply Fan[V]	1 AC or 2 AC 230					
• Aux. curr. requirem.at 50 Hz [A]	0.43					
• Aux. curr. requirem.at 60 Hz [A]	0.49					
Pulse frequency [kHz]	1.5 to 16 (see Fig. „Derating curves“)					
Load class II to EN 60 146-1-1						
Base load current [A]	0.91 x rated output current					
Base load duration [s]	240					
Overload current [A]	1.36 x rated output current					
Overload duration [s]	60					
Load class II to EN 60 146-1-1 (additional)						
Base load current [A]	0.91 x rated output current					
Base load duration [s]	270					
Overload current [A]	1.6 x rated output current					
Overload duration [s]	30					
Losses, cooling, power factor						
Power factor conv. cosφC	< 0.92 ind.					
Efficiency η (Rated operation)	≥ 0.98					
Power loss (at 2.5 kHz) [kW]	0.44	0.54	0.60			
Cooling-air requirement [m³/s]	0.054	0.054	0.054			
Pressure drop Δp [Pa]	230	230	230			
Sound pressure level, types of construction, dimensions, weights						
Sound pressure level[dB(A)]	65	65	65			
Type of construction	D	D	D			
Dimensions [mm] • Width • Height • Depth	 270 600 350	 270 600 350	 270 600 350			
Weight approx. [kg]	32	32	32			

Table 4-3 Air-cooled inverter (part 2)

Designation	Value					
Order No. 6SE70...	16-1TA61	18-0TA61	21-0TA61	21-3TB61	21-8TB61	22-6TC61
Rated voltage [V] • Input • Output	DC 510 (-15 %) to 650 (+10 %) 3 AC 0 to rated DC voltage x 0.75					
Rated frequency [Hz] • Input • Output: V/f = constant V = constant	--- 0 to 600 8 to 300					
Rated current [A] • Input • Output	7.3 6.1	9.5 8.0	12.1 10.2	15.7 13.2	20.8 17.5	30.4 25.5
DC link voltage [V]	= rated DC voltage					
Rated output [kVA]	4.1 to 5.0	5.3 to 6.6	6.8 to 8.4	8.7 to 10.9	11.6 to 14.5	16.8 to 21.2
Auxiliary current supply [V]	DC 24 (20 - 30)					
• Max. aux. curr. requirement[A] Standard version at 20 V	1.5					
• Max. aux. curr. requirement[A] Maximum version at 20 V	2.5					
Pulse frequency [kHz]	1.5 to 16 (see Fig. „Derating curves“)					
Load class II to EN 60 146-1-1						
Base load current [A]	0.91 x rated output current					
Base load duration [s]	240					
Overload current [A]	1.36 x rated output current					
Overload duration [s]	60					
Load class II to EN 60 146-1-1 (additional)						
Base load current [A]	0.91 x rated output current					
Base load duration [s]	270					
Overload current [A]	1.6 x rated output current					
Overload duration [s]	30					
Losses, cooling, power factor						
Power factor conv. cosφC	< 0.92 ind.					
Efficiency η (Rated operation)	≥ 0.97	≥ 0.98				
Power loss (at 2.5 kHz) [kW]	0.09	0.10	0.12	0.13	0.16	0.27
Cooling-air requirement [m³/s]	0.009	0.009	0.009	0.022	0.022	0.028
Pressure drop Δp [Pa]	10	10	10	32	32	30
Sound pressure level, types of construction, dimensions, weights						
Sound pressure level [dB(A)]	60	60	60	60	60	60
Type of construction	A	A	A	B	B	C
Dimensions [mm] • Width • Height • Depth	 90 425 350	 90 425 350	 90 425 350	 135 425 350	 135 425 350	 180 600 350
Weight approx. [kg]	8.5	8.5	8.5	12.5	12.5	21

Table 4-4 Air-cooled inverter (part 3)

Designation	Value					
Order No. 6SE70...	23-4TC61	23-8TD61	24-7TD61	26-0TD61	27-2TD61	
Rated voltage [V] • Input • Output	DC 510 (-15 %) to 650 (+10 %) 3 AC 0 to rated DC voltage x 0.75					
Rated frequency [Hz] • Input • Output: V/f = constant V = constant	--- 0 to 600 8 to 300					
Rated current [A] • Input • Output	40.5 34.0	44.6 37.5	55.9 47.0	70.2 59.0	85.7 72.0	
DC link voltage [V]	= rated DC voltage					
Rated output [kVA]	22.4 to 28.2	24.7 to 31.1	31.0 to 39.0	38.9 to 49.0	47.4 to 59.8	
Auxiliary current supply [V]	DC 24 (20 - 30)					
• Max. aux. curr. requirement[A] Standard version at 20 V	1.5					
• Max. aux. curr. requirement[A] Maximum version at 20 V	2.5					
Auxiliary current supply fan [V]	None	1 AC or 2 AC 230				
• Aux. curr. requirem.at 50 Hz [A]	---	0.43				
• Aux. curr. requirem.at 60 Hz [A]	---	0.49				
Pulse frequency [kHz]	1.5 to 16 (see Fig. „Derating curves“)					
Load class II to EN 60 146-1-1						
Base load current [A]	0.91 x rated output current					
Base load duration [s]	240					
Overload current [A]	1.36 x rated output current					
Overload duration [s]	60					
Load class II to EN 60 146-1-1 (additional)						
Base load current [A]	0.91 x rated output current					
Base load duration [s]	270					
Overload current [A]	1.6 x rated output current					
Overload duration [s]	30					
Losses, cooling, power factor						
Power factor conv. cosφC	< 0.92 ind.					
Efficiency η (Rated operation)	≥ 0.98					
Power loss (at 2.5 kHz) [kW]	0.37	0.49	0.58	0.70	0.86	
Cooling-air requirement [m³/s]	0.028	0.054	0.054	0.054	0.054	
Pressure drop Δp [Pa]	30	230	230	230	230	
Sound pressure level, types of construction, dimensions, weights						
Sound pressure level [dB(A)]	60	65	65	65	65	
Type of construction	C	D	D	D	D	
Dimensions [mm] • Width • Height • Depth	 180 600 350	 270 600 350	 270 600 350	 270 600 350	 270 600 350	
Weight approx. [kg]	21	32	32	32	32	

Table 4-5 Air-cooled inverter (part 4)

Designation	Value					
Order No. 6SE70...	14-5UB61	16-2UB61	17-8UB61	21-1UB61	21-5UB11	22-2UC61
Rated voltage [V] • Input • Output	DC 675 (-15 %) to 810 (+ 10 %) 3 AC 0 to rated DC voltage x 0.75					
Rated frequency [Hz] • Input • Output: V/f = constant V = constant	--- 0 to 600 8 to 300					
Rated current [A] • Input • Output	5.4 4.5	7.4 6.2	9.3 7.8	13.1 11.0	18.0 15.1	26.2 22.0
DC link voltage [V]	= rated DC voltage					
Rated output [kVA]	3.9 to 4.6	5.4 to 6.4	6.8 to 8.1	9.6 to 11.4	13.1 to 15.6	19.1 to 22.8
Auxiliary current supply [V]	DC 24 (20 - 30)					
• Max. aux. curr. requirement[A] Standard version at 20 V	1.5					
• Max. aux. curr. requirement[A] Maximum version at 20 V	2.5					
Pulse frequency [kHz]	1.5 to 16 (see Fig. „Derating curves“)					
Load class II to EN 60 146-1-1						
Base load current [A]	0.91 x rated output current					
Base load duration [s]	240					
Overload current [A]	1.36 x rated output current					
Overload duration [s]	60					
Load class II to EN 60 146-1-1 (additional)						
Base load current [A]	0.91 x rated output current					
Base load duration [s]	270					
Overload current [A]	1.6 x rated output current					
Overload duration [s]	30					
Losses, cooling, power factor						
Power factor conv. cosφC	< 0.92 ind.					
Efficiency η (Rated operation)	≥ 0.99	≥ 0.98	≥ 0.99			
Power loss (at 2.5 kHz) [kW]	0.08	0.09	0.10	0.13	0.17	0.27
Cooling-air requirement [m³/s]	0.022	0.022	0.022	0.022	0.022	0.028
Pressure drop Δp [Pa]	32	32	32	32	32	30
Sound pressure level, types of construction, dimensions, weights						
Sound pressure level [dB(A)]	60	60	60	60	60	60
Type of construction	B	B	B	B	B	C
Dimensions [mm] • Width • Height • Depth	 135 425 350	 135 425 350	 135 425 350	 135 425 350	 135 425 350	 180 600 350
Weight approx. [kg]	12.5	12.5	12.5	12.5	12.5	21

Table 4-6 Air-cooled inverter (part 5)

Designation	Value					
Order No. 6SE70...	23-0UD61	23-4UD61	24-7UD61			
Rated voltage [V] • Input • Output	DC 675 (-15 %) to 810 (+ 10 %) 3 AC 0 to rated DC voltage x 0.75					
Rated frequency [Hz] • Input • Output: - V/f = constant V = constant	 --- 0 to 600 8 to 300					
Rated current [A] • Input • Output	 34.5 29.0	 40.2 34.0	 55.4 46.5			
DC link voltage [V]	= rated DC voltage					
Rated output [kVA]	25.2 to 30.1	29.5 to 35.3	40.3 to 48.3			
Auxiliary current supply [V]	DC 24 (20 - 30)					
• Max. aux. curr. requirement[A] Standard version at 20 V	1.5					
• Max. aux. curr. requirement[A] Maximum version at 20 V	2.5					
Auxiliary current supply fan [V]	1 AC or 2 AC 230					
• Aux. curr. requirem.at 50 Hz [A]	0.43					
• Aux. curr. requirem. at 60 Hz [A]	0.49					
Pulse frequency [kHz]	1.5 to 16 (see Fig. „Derating curves“)					
Load class II to EN 60 146-1-1						
Base load current [A]	0.91 x rated output current					
Base load duration [s]	240					
Overload current [A]	1.36 x rated output current					
Overload duration [s]	60					
Load class II to EN 60 146-1-1 (additional)						
Base load current [A]	0.91 x rated output current					
Base load duration [s]	270					
Overload current [A]	1.6 x rated output current					
Overload duration [s]	30					
Losses, cooling, power factor						
Power factor conv. cosφC	< 0.92 ind.					
Efficiency η (Rated operation)	0.98					
Power loss (at 2.5 kHz) [kW]	0.52	0.59	0.74			
Cooling-air requirement [m³/s]	0.054	0.054	0.054			
Pressure drop Δp [Pa]	230	230	230			
Sound pressure level, types of construction, dimensions, weights						
Sound pressure level [dB(A)]	65	65	65			
Type of construction	D	D	D			
Dimensions [mm] • Width • Height • Depth	 270 600 350	 270 600 350	 270 600 350			
Weight approx. [kg]	32	32	32			

Table 4-7 Air-cooled inverter (part 6)

Significance of the options codes

Option	Significance	Option	Significance
	CBP: Profibus		**EB1:** Expansion Board 1
G11	Slot A	G61	Slot A
G13	Slot C	G63	Slot C
G14	Slot D	G64	Slot D
G15	Slot E	G65	Slot E
G16	Slot F	G66	Slot F
G17	Slot G	G67	Slot G
	CBC: CAN-Bus		**EB2:** Expansion Board 2
G21	Slot A	G71	Slot A
G23	Slot C	G73	Slot C
G24	Slot D	G74	Slot D
G25	Slot E	G75	Slot E
G26	Slot F	G76	Slot F
G27	Slot G	G77	Slot G
	SLB: SIMOLINK		LBA backplane bus adapter
G41	Slot A	K11	installed in the electronics box
G43	Slot C		
G44	Slot D		
G45	Slot E		ADB adapter board
G46	Slot F	K01	Mounting pos. 2 (slot D, E)
G47	Slot G	K02	Mounting pos. 3 (slot F, G)

Table 4-8 Significance of the option codes

5 Installation

5.1 Installing the unit

WARNING

Safe converter operation requires that the equipment is mounted and commissioned by qualified personnel taking into account the warning information provided in these Operating Instructions.

The general and domestic installation and safety regulations for work on electrical power equipment (e.g. VDE) must be observed as well as the professional handling of tools and the use of personal protective equipment.

Death, severe bodily injury or significant material damage could result if these instructions are not followed.

Clearances

When positioning the units, it must be observed that the DC link connection is located at the top section of the unit and the motor connection at the lower section of the unit.

The units can be mounted flush with each other.

In order to ensure an adequate supply of cooling air, a clearance of 100 mm must be left at the top of the unit and 250 mm at the bottom of the unit respectively to components which may considerably affect the flow of cooling air.

When mounting in switch cabinets, the cabinet cooling must be dimensioned according to the dissipated power. Please refer to the Technical Data in this regard.

Requirements at the point of installation

- Foreign particles
  The units must be protected against the ingress of foreign particles as otherwise their function and operational safety cannot be ensured.
- Dust, gases, vapors
  Equipment rooms must be dry and dust-free. Ambient and cooling air must not contain any electrically conductive gases, vapors and dusts which could diminish the functionality. If necessary, filters should be used or other corrective measures taken.
- Cooling air
  The ambient climate of the units must not exceed the values of DIN IEC 721-3-3 class 3K3. For cooling air temperatures of more than 40°C (104°F) and installation altitudes higher than 1000 m, derating is required.

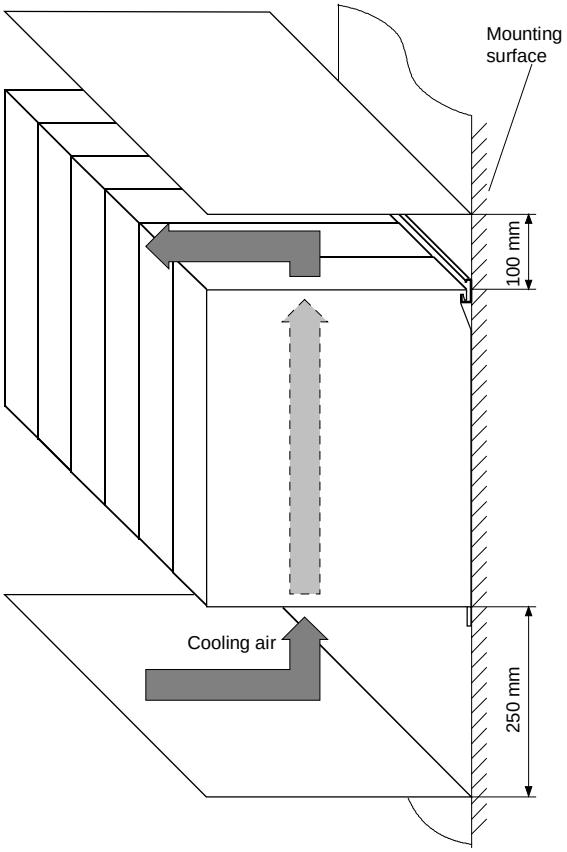

Fig. 5-1 Minimum clearances for cooling

Mounting

The unit is mounted directly to a mounting surface, for which you require the following:

- G-type mounting rail according to EN50035 with screws for fixing at the top
- One M6 screw for types A to C, two M6 screws for type D, for fixing at the bottom
- Dimension drawing for types A, B and for types C, D.

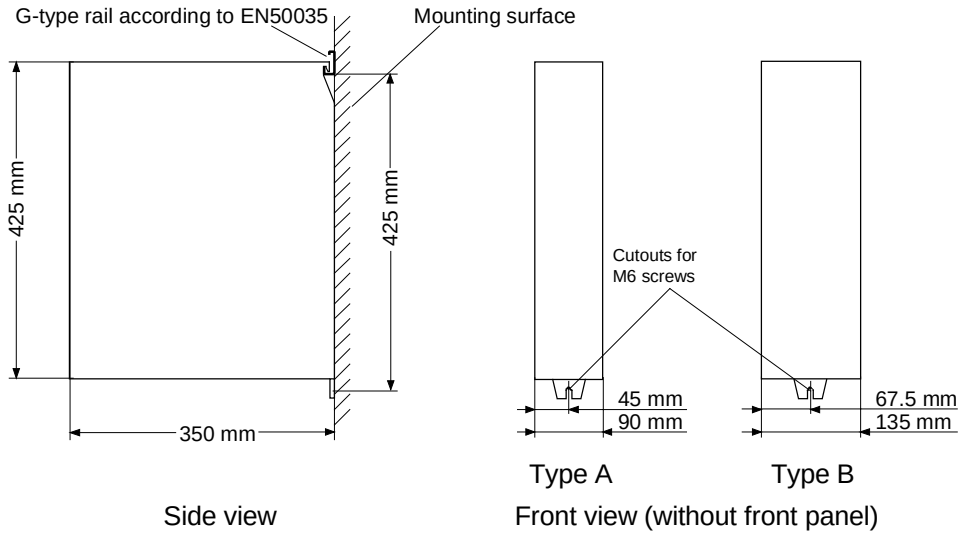

Fig. 5-2 Dimension drawings for installation of types A, B

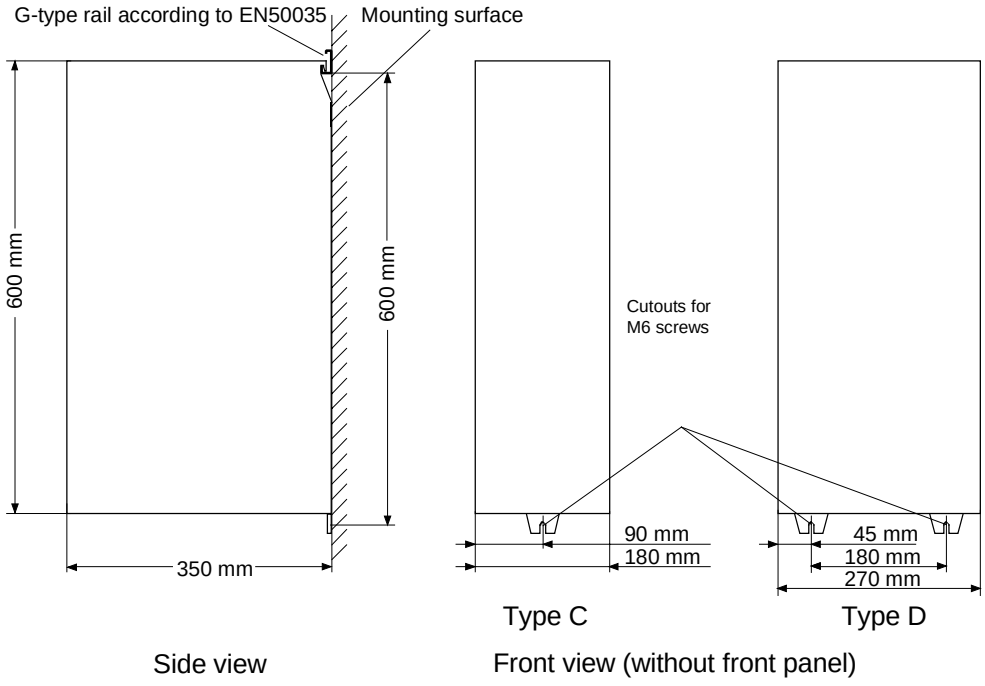

Fig. 5-3 Dimension drawings for installation of types C,D

5.2 Installing the optional boards

WARNING

The boards may only be replaced by qualified personnel.

It is not permitted to withdraw or insert the boards under voltage.

Slots

A maximum of six slots are available in the electronics box of the unit for installing optional boards. The slots are designated with the letters A to G. Slot B is not provided in the electronics box. It is used in units of the Compact PLUS type of construction.

If you wish to use slots D to G, you will additionally require the following:

- Bus expansion LBA (Local Bus Adapter), which is used for mounting the CU board and up to two adaption boards, and
- An adaption board (ADB - Adaption Board) on which up to two optional boards can be mounted.

The slots are situated at the following positions:

- Slot A CU board Position: top
- Slot C CU board Position: bottom
- Slot D Adaption board at mounting position 2 Position: top
- Slot E Adaption board at mounting position 2 Position: bottom
- Slot F Adaption board at mounting position 3 Position: top
- Slot G Adaption board at mounting position 3 Position: bottom

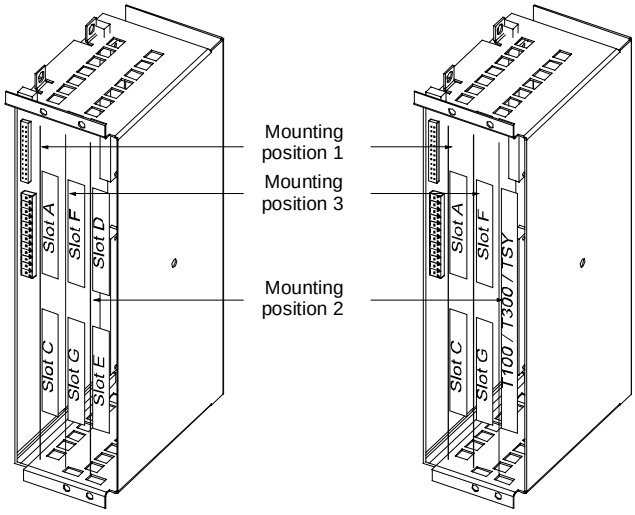

Fig. 5-4 Position of the slots for Compact and chassis type units

NOTE

Mounting position 2 can be used for technology boards (T100, T300, TSY).

Mounting positions 2 and 3 can also be used for communication boards SCB1 and SCB2.

WARNING

The unit has hazardous voltage levels up to 5 minutes after it has been powered down due to the DC link capacitors. The unit must not be opened until at least after this delay time.

CAUTION

The optional boards contain components which could be damaged by electrostatic discharge. These components can be very easily destroyed if not handled with caution. You must observe the ESD cautionary measures when handling these boards.

Disconnecting the unit from the supply

Disconnect the unit from the incoming power supply (AC or DC supply) and de-energize the unit. Remove the 24 V voltage supply for the electronics.

Open the front panel.

Preparing installation

Remove the CU board or the adaption board from the electronics box as follows:

- Disconnect the connecting cables to the CU board or to the optional boards.
- Undo the two fixing screws on the handles above and below the CU board or the adaption board.
- Pull the CU board or the adaption board out of the electronics box using the handles.
- Place the CU board or the adaption board on a grounded working surface.

Installing the optional board

Insert the optional board from the right onto the 64-pole system connector on the CU board or on the adaption board. The view shows the installed state.

Screw the optional board tight at the fixing points in the front section of the optional board using the two screws attached.

Re-installing the unit

Re-install the CU board or the adaption board in the electronics box as follows:

- Insert the CU board into mounting position 1 and the adaption board into mounting position 2 or 3.

NOTE

Mounting position 3 cannot be used until at least one adaption board has been installed at mounting position 2
Boards should first be installed in mounting position 2, before mounting position 3 is used.

- Secure the CU board/adaption board at the handles with the fixing screws.

Re-connect the previously removed connections.

Check that all the connecting cables and the shield sit properly and are in the correct position.

6 Installation in Conformance with EMC Regulations

The following contains a summary of general information and guidelines which will make it easier for you to comply with EMC and CE regulations.

- Ensure that there is a conductive connection between the housing of the converters or inverters and the mounting surface. The use of mounting surfaces with good conducting properties (e.g. galvanized steel plate) is recommended. If the mounting surface is insulated (e.g. by paint), use contact washers or serrated washers.
- All of the metal cabinet parts must be connected through the largest possible surface area and must provide good conductivity.
  If necessary, use contact washers or serrated washers.
- Connect the cabinet doors to the cabinet frame using grounding strips which must be kept as short as possible.
- For the connection between converter/inverter and motor, use shielded cables which have to be grounded on both sides over a large surface area.
  If the motor terminal box is of plastic, additional grounding strands have to be inserted.
- The shield of the motor supply cable must be connected to the shield connection of the converter and to the motor mounting panel through the largest possible surface area.
- The motor cable shield must not be interrupted by output reactors, fuses or contactors.
- All signal cables must be shielded. Separate the signal cables according to signal groups.
  Do not route cables with digital signals unshielded next to cables with analog signals. If you use a common signal cable for both, the individual signals must be shielded from each other.
- Power cables must be routed separately away from signal cables (at least 20 cm apart). Provide partitions between signal cables and power cables. The partitions must be grounded.
- Connect the reserve cables/conductors to ground at both ends to achieve an additional shielding effect.
- Lay the cables close to grounded plates as this will reduce the injection of undesired signals.
- Eliminate any unnecessary cable lengths because these will produce unnecessary coupling capacitances and inductances.

- Use cables with braided shields. Cables with foil shields have a shielding effect which is worse by a factor of five.
- Contactor operating coils that are connected to the same supply network as the converter or that are located in close proximity of the converter must be connected to overvoltage limiters (e.g. RC circuits, varistors).

You will find further information in the brochure "Installation Instructions for EMC-correct Installation of Drives"
(Order No.: 6SE7087-6CX87-8CE0).

7 Connecting-up

WARNING

SIMOVERT MASTERDRIVES units are operated at high voltages.
The equipment must be in a no-voltage condition (disconnected from the supply) before any work is carried out!
Only professionally trained, qualified personnel must work on or with the units.
Death, severe bodily injury or significant property damage could occur if these warning instructions are not observed.

Hazardous voltages are still present in the unit up to 5 minutes after it has been powered down due to the DC link capacitors. Thus, the appropriate delay time must be observed before working on the unit or on the DC link terminals.

The power terminals and control terminals can still be live even when the motor is stationary.
If the DC link voltage is supplied centrally, the converters must be reliably isolated from the DC link voltage!

When working on an opened unit, it should be observed that live components (at hazardous voltage levels) can be touched (shock hazard).

The user is responsible that all the units are installed and connected-up according to recognized regulations in that particular country as well as other regionally valid regulations. Cable dimensioning, fusing, grounding, shutdown, isolation and overcurrent protection should be particularly observed.

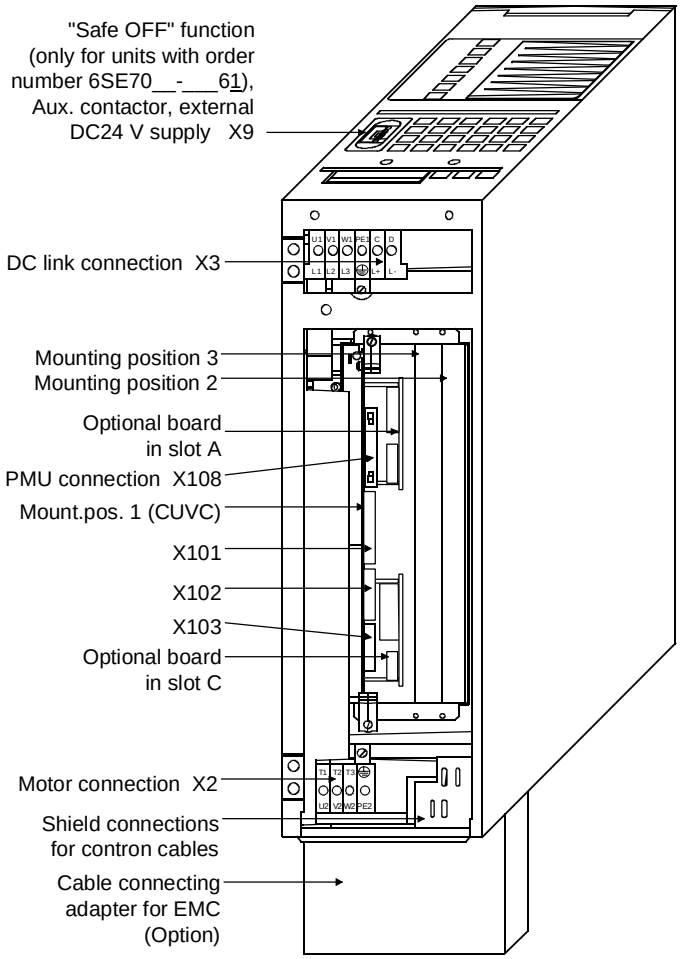

Fig. 7-1 Connection overview for types A, B and C

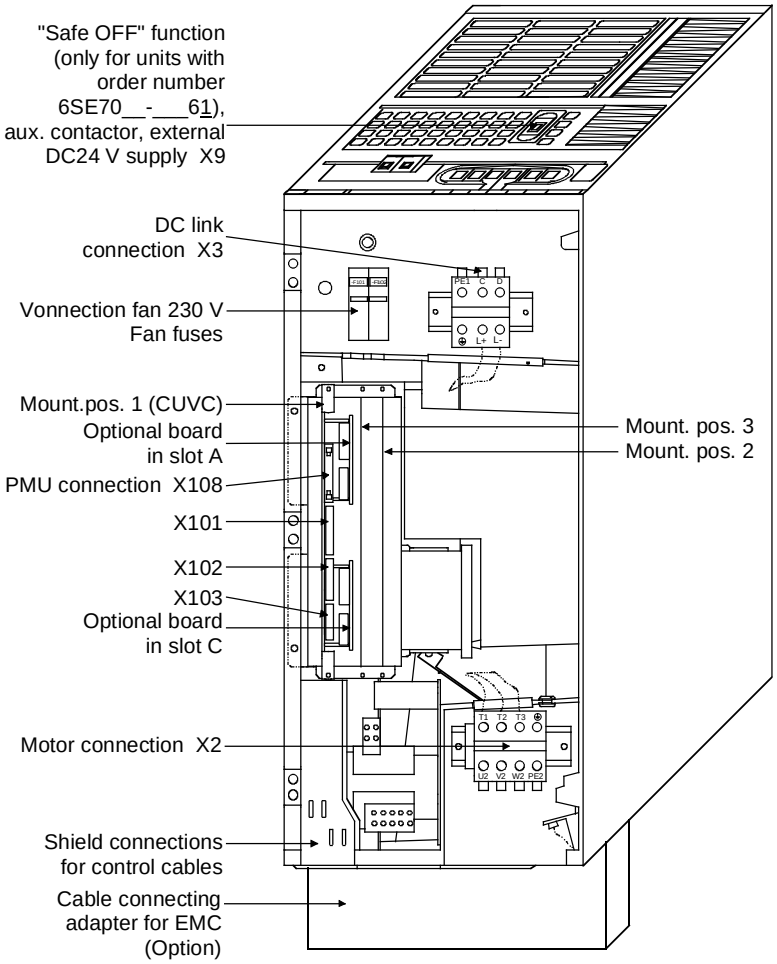

Fig. 7-2 Connection overview for type D

NOTE

An external aux. voltage of 230 V AC must be connected to F101 and F102 in the case of type of construction D. The aux. voltage is needed for the fan in the unit.

7.1 Power connections

Protective conductor

The protective conductor must be connected up both on the mains side and on the motor side.

On account of leakage currents through the interference-suppression capacitors, a minimum cross-section of 10 mm² must be used in accordance with VDE 0160. If mains connections with cross-sections less than 10 mm² are used, the following measures can be applied.

If the unit is mounted on a grounded mounting surface via a conductive connection, the protective conductor cross-section can be the same as that of the supply-cable conductor.

In the case of insulated installation or a poor conductive connection to the mounting surface, a separate protective conductor with a cross-section of 10 mm² can be connected up instead of the protective conductor of the mains connection.

DC voltage 270 V to 310 V												
Order	**Rated**	**Infeed side**							**Motor side**			
number	**direct current**	**Cross-section**		**Recom-mended fuse**		**Internal DC fuse**			**Rated output**		**Cross-section**	
6SE70...		**VDE**	**AWG**	**gR (SITOR)**		**Type**			**voltage**	**current**	**VDE**	**AWG**
	[A]	[mm²]		[A]	3NE...	FWP...	[V]	[A]	[V]	[A]	[mm²]	
21-1RA60	12.6	1.5	16	25	8015	-			0 to 230	10.6	1.5	16
21-3RA60	15.8	2.5	14	35	8003	-			0 to 230	13.3	1.5	16
21-8RB60	21.1	4	10	50	8017	-			0 to 230	17.7	2.5	14
22-3RB60	27.3	6	8	80	8020	-			0 to 230	22.9	4	10
23-2RB60	38.3	10	6	100	8021	-			0 to 230	32.2	10	6
24-4RC60	52.6	16	4	125	8022	-			0 to 230	44.2	16	4
25-4RD60	64.3	35	2	160	8024	-			0 to 230	54.0	25	2
27-0RD60	82.1	35	2	160	8024	-			0 to 230	69.0	25	2
28-1RD60	96.4	50	0	160	4124	-			0 to 230	81.0	35	0
DC voltage 510 V to 650 V												
Order	**Rated**	**Infeed side**							**Motor side**			
Number	**direct current**	**Cross-section**		**Recom-mended fuse**		**Internal DC fuse**			**Rated output**		**Cross-section**	
6SE70...		**VDE**	**AWG**	**gR (SITOR)**		**Type**			**voltage**	**current**	**VDE**	**AWG**
	[A]	[mm²]		[A]	3NE...	FWP...	[V]	[A]	[V]	[A]	[mm²]	
16-1TA61	7.3	1.5	16	25	8015	25A14F	700	25	0 to 480	6.1	1.5	16
18-0TA61	9.5	1.5	16	25	8015	50A14F	700	50	0 to 480	8.0	1.5	16
21-0TA61	12.1	1.5	16	25	8015	50A14F	700	50	0 to 480	10.2	1.5	16
21-3TB61	15.7	4	10	50	8017	50A22F	700	50	0 to 480	13.2	2.5	14
21-8TB61	20.8	4	10	50	8017	50A22F	700	50	0 to 480	17.5	2.5	14
22-6TC61	30.4	10	6	80	8020	100A22F	700	100	0 to 480	25.5	6	8
23-4TC61	40.5	10	6	80	8020	100A22F	700	100	0 to 480	34.0	10	6
23-8TD61	44.6	16	4	125	8022	100A22F	700	100	0 to 480	37.4	16	4
24-7TD61	55.9	25	2	125	8022	100A22F	700	100	0 to 480	47.0	16	4
26-0TD61	70.2	35	0	160	8024	80A22F	700	2x80	0 to 480	59.0	25	2
27-2TD61	85.7	30	0	160	8024	80A22F	700	2x80	0 to 480	72.0	25	2

DC voltage 675 V to 810 V												
Order	**Rated**			**Infeed side**					**Motor side**			
number	**direct current**	**Cross-section**		**Recom-mended fuse**		**Internal DC fuse**			**Rated output**		**Cross-section**	
6SE70...		**VDE**	**AWG**	**GR (SITOR)**		**Type**			**voltage**	**current**	**VDE**	**AWG**
	[A]	[mm²]		[A]	3NE...	FWP...	[V]	[A]	[V]	[A]	[mm²]	
14-5UB61	5.4	1.5	16	32	4101	50A22F	700	25	0 to 600	4.5	1.5	16
16-2UB61	7.4	1.5	16	32	4101	50A22F	700	50	0 to 600	6.2	1.5	16
17-8UB61	9.3	2.5	14	32	4101	50A22F	700	50	0 to 600	7.8	1.5	16
21-1UB61	13.0	4	10	32	4101	50A22F	700	50	0 to 600	11.0	1.5	16
21-5UB61	18.0	4	10	32	4101	50A22F	700	50	0 to 600	15.1	1.5	16
22-2UC61	26.2	6	8	50	4117	50A22F	700	50	0 to 600	22.0	4	10
23-0UD61	34.5	16	4	80	4120	100A22F	700	100	0 to 600	29.0	10	6
23-4UD61	40.5	16	4	80	4120	100A22F	700	100	0 to 600	34.0	10	6
24-7UD61	55.4	25	2	100	4121	100A22F	700	100	0 to 600	46.5	16	4

Table 7-1 Conductor cross-sections, fuses

NOTE

The connection cross-sections are calculated for copper cables at 40 °C (104 °F) ambient temperature (according to DIN VDE 0298 Part 4 / 02.88 Group 5).

Additional fuses on the infeed side are not necessary for rated DC voltages of 510 V to 810 V on account of the DC fuses integrated in the unit, provided that the supply cables to the DC bus are laid in a short-circuit proof manner and that overloading by other consumers can be excluded.

Maximum possible connection cross-sections

Type	Order number	Finely-stranded		Multi-stranded, solid	
		mm²	AWG	mm²	AWG
A	6SE702_-__A__	1.5 to 10	12 to 6	2.5 to 16	12 to 4
B	6SE702_-__B__	1.5 to 10	12 to 6	2.5 to 16	12 to 4
C	6SE702_-__C__	4 to 16	10 to 4	10 to 25	6 to 2
D	6SE702_-__D__	10 to 35	6 to 2	10 to 50	6 to 0

Table 7-2 Maximum connectable cross-sections

7.1.1 Terminal strip X9 (only for units with a rated input voltage of DC 510 - 650 V and DC 675 - 810 V)

X9 - external DC 24 V supply, safe OFF, main contactor control

The 9-pole terminal strip is used for connecting up a 24 V voltage supply and for connecting up a main or bypass contactor and for the "Safe OFF" function.

The voltage supply is required if the inverter is connected up via a main or bypass contactor.

The connections for the contactor control are floating.

The “Safe OFF” function ensures that no rotating field can occurr at the motor terminals, i.e. the motor cannot rotate. By opening the jumper between terminals X9.5 and X9.6 (through an external contact), the "Safe OFF" function is activated. The inverter is delivered with jumpered terminals X9.5 and X9.6.

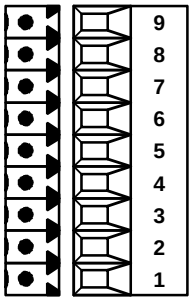

Terminal	Designation	Description	Range
9	Main contactor control	Main contactor control	DC30 V, 0.5 A
8	n.c.	Not connected	
7	Main contactor control	Main contactor control	
6	Safe OFF	"Safe OFF" control	DC 30 V
5	Safe OFF	"Safe OFF" control	10...30 mA
4	Safe OFF	"Safe OFF" checkback	DC30 V
3	Safe OFF	"Safe OFF" checkback	2 A
2	0 V	Reference potential	0 V
1	+24 V (in)	24 V voltage supply	DC 24 V ≤ 2.5 A

Connectable cross-section: 1.5 mm² (AWG 16)

Terminal 1 is at the front when installed.

Table 7-3 Connection of external aux. voltage supply DC 24 V, safe OFF, main contactor control

WARNING

The power terminals may still be live even if the "Safe OFF" function is activated!

The relay on PEU -X9:7.9 is only suitable for switching voltages up to 30 V with a 9-pole terminal strip!

7.1.2 Terminal strip X9 (only for units with a rated input voltage of DC 270 - 310 V)

X9 - external DC 24 V supply, main contactor control

The 5-pole terminal strip is used to for connecting up a 24 V voltage supply and a main or bypass contactor.

The voltage supply is required if the inverter is connected up via a main or bypass contactor.

The connections for the contactor control are floating.

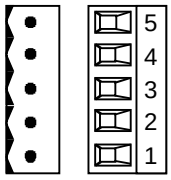

Terminal	Designation	Description	Range
5	Main contactor control	Main contactor control	AC 230 V
4	Main contactor control	Main contactor control	1 kVA
3	n.c.	Not connected	
2	0 V	Reference potential	0 V
1	+24 V (in)	24 V voltage supply	DC24 V ≤ 2.5 A

Connectable cross-section: 2.5 mm² (AWG 12)

Terminal 1 is at the front when installed.

Table 7-4 Connection of external aux. voltage supply DC24 V and main contactor control for units for voltage supply DC 270 V to 310 V)

7.2 Control connections

Standard connections

In the basic version, the unit has the following control connections on the CUVC:

- Serial interface (RS232 / RS485) for PC or OP1S
- A serial interface (USS bus, RS485)
- A control terminal strip for connecting up a HTL unipolar pulse encoder and a motor temperature sensor (PTC / KTY84)
- Two control terminal strips with digital and analog inputs and outputs.

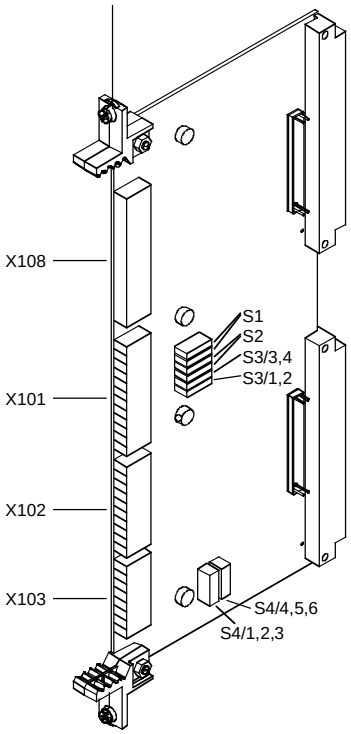

Fig. 7-3 View of the CUVC

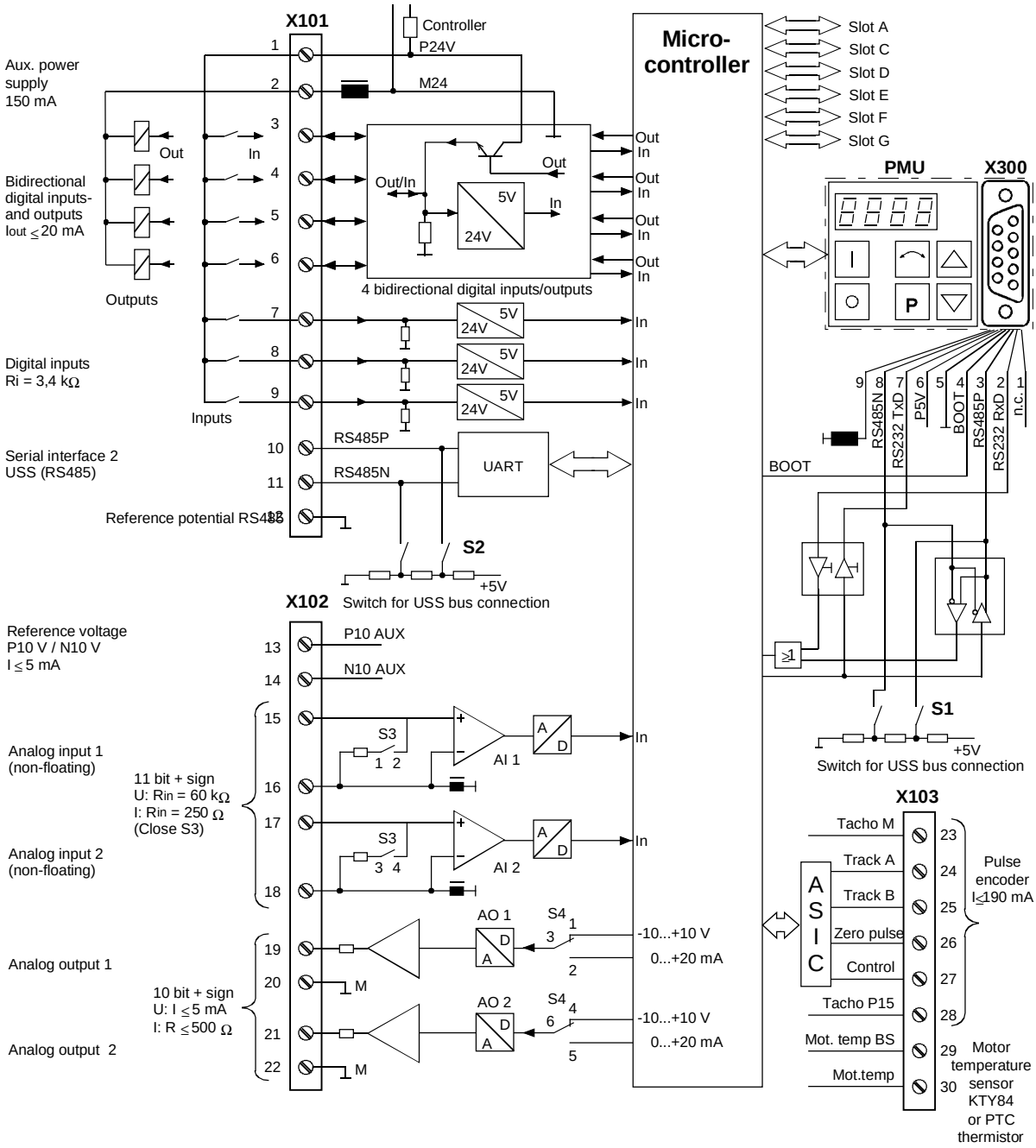

Fig. 7-4 Overview of the standard connections

X101 – Control terminal strip

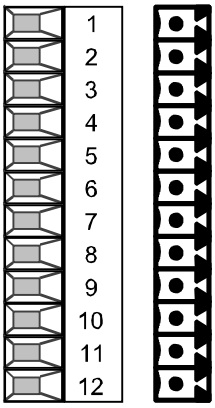

The following connections are provided on the control terminal strip:

- 4 optionally parameterizable digital inputs and outputs
- 3 digital inputs
- 24 V aux. voltage supply (max. 150 mA) for the inputs and outputs
- 1 serial interface SCom2 (USS / RS485)

Terminal	Designation	Significance	Range
1	P24 AUX	Aux. voltage supply	DC 24 V / 150 mA
2	M24 AUX	Reference potential	0 V
3	DIO1	Digital input/output 1	24 V, 10 mA / 20 mA
4	DIO2	Digital input/output 2	24 V, 10 mA / 20 mA
5	DIO3	Digital input/output 3	24 V, 10 mA / 20 mA
6	DIO4	Digital input/output 4	24 V, 10 mA / 20 mA
7	DI5	Digital input 5	24 V, 10 mA
8	DI6	Digital input 6	24 V, 10 mA
9	DI7	Digital input 7	24 V, 10 mA
10	RS485 P	USS bus connection SCom2	RS485
11	RS485 N	USS bus connection SCom2	RS485
12	M RS485	Reference potential RS485	

Connectable cross-section: 1.5 mm² (AWG 16)

Terminal 1 is at the top when installed.

Table 7-5 Control terminal strip X101

X102 – Control terminal strip

The following connections are provided on the control terminal strip:

- 10 V aux. voltage (max. 5 mA) for the supply of an external potentiometer
- 2 analog inputs, can be used as current or voltage input
- 2 analog outputs, can be used as current or voltage output

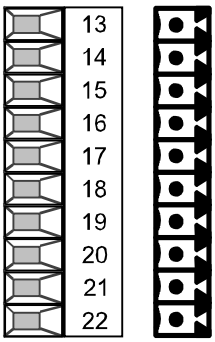

Terminal	Designation	Significance	Range
13	P10 V	+10 V supply for ext. potentiometer	+10 V ±1.3 %, Imax = 5 mA
14	N10 V	-10 V supply for ext. potentiometer	-10 V ±1.3 %, Imax = 5 mA
15	AI1+	Analog input 1 +	11 bit + sign
16	M AI1	Ground, analog input 1	Voltage:
17	AI2+	Analog input 2 +	± 10 V / Ri = 60 kΩ
18	M AI2	Ground, analog input 2	Current: Rin = 250 Ω
19	AO1	Analog output 1	10 bit + sign
20	M AO1	Ground, analog output 1	Voltage:
21	AO2	Analog output 2	± 10 V / Imax = 5 mA
22	M AO2	Ground, analog output 2	Current: 0...20 mA R ≥ 500 Ω

Connectable cross-section: 1.5 mm² (AWG 16)

Terminal 13 is at the top when installed.

Table 7-6 Control terminal strip X102

X103 – Pulse encoder connection

The connection for a pulse encoder (HTL unipolar) is provided on the control terminal strip.

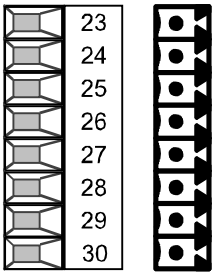

Terminal	Designation	Significance	Range
23	- V_{SS}	Ground for power supply	
24	Track A	Connection for track A	HTL unipolar
25	Track B	Connection for track B	HTL unipolar
26	Zero pulse	Connection for zero pulse	HTL unipolar
27	CTRL	Connection for control track	HTL unipolar
28	+ V_{SS}	Power supply pulse encoder	15 V Imax = 190 mA
29	- Temp	Minus (-) connection KTY84/PTC	KTY84: 0...200 °C
30	+ Temp	Plus (+) connection KTY84/PTC	PTC: R_{cold} ≤ 1.5 kΩ

Connectable cross-section: 1.5 mm² (AWG 16)

Terminal 23 is at the top when installed.

Table 7-7 Control terminal strip X103

X300 - Serial interface

Either an OP1S or a PC can be connected up via the 9-pole Sub D socket.

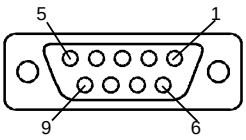

Pin	Name	Significance	Range
1	n.c.	Not connected	
2	RS232 RxD	Receive data via RS232	RS232
3	RS485 P	Data via RS485	RS485
4	Boot	Control signal for software update	Digital signal, low active
5	M5V	Reference potential to P5V	0 V
6	P5V	5 V aux. voltage supply	+5 V, Imax = 200 mA
7	RS232 TxD	Transmit data via RS232	RS232
8	RS485 N	Data via RS485	RS485
9	n.c.	Not connected	

Table 7-8 Serial interface X300

Switch settings

Switch	Significance
S1	**SCom1 (X300): Bus terminating resistor**
• open	• Resistor open
• closed	• Resistor closed
S2	**SCom2 (X101/10,11): Bus terminating resistor**
• open	• Resistor open
• closed	• Resistor closed
S3 (1,2)	**AI1: Changeover current/voltage input**
• open	• Voltage input
• closed	• Current input
S3 (3,4)	**AI2: Changeover current/voltage input**
• open	• Voltage input
• closed	• Current input
S4 (1,2,3)	**AO1: Changeover current/voltage output**
• Jumper 1, 3	• Voltage output
• Jumper 2, 3	• Current output
S4 (4,5,6)	**AO2: Changeover current/voltage output**
• Jumper 4, 6	• Voltage output
• Jumper 5, 6	• Current output

8 Parameterization

The functions stored in the units are adapted to your specific application by means of parameters. Every parameter is clearly identified by its parameter name and its parameter number. In addition to the parameter name and number, many parameters also have a parameter index. These indices enable several values to be stored for a parameter under one parameter number.

Parameter numbers consist of a letter and a three-digit number. The upper-case letters P, U, H and L represent the parameters which can be changed, and the lower-case letters r, n, d and c represent the visualization parameters which cannot be changed.

Examples:

DC Bus Volts r006 = 541	Parameter name:	DC Bus volts
	Parameter number:	r006
	Parameter index:	Does not exist
	Parameter value:	541 V
Src ON/OFF1 P554.2 = 20	Parameter name:	Src ON/OFF1
	Parameter number:	P554
	Parameter index:	2
	Parameter value:	20

Parameters can be input as follows:

- Via the PMU parameterizing unit which is permanently mounted on the front of the units,
- Via the user-friendly optional OP1S operator control panel or
- Via a PC and the SIMOVIS service program.

The parameters stored in the units can only be changed under certain conditions. The following preconditions must be satisfied before they can be changed.

- The parameter must be a changeable parameter. (Designated by upper-case letters in the parameter number).
- Parameter access must be granted.
  P053 = 6 for parameterizing via the PMU or the OP1S).
- The unit must be in a status which permits parameters to be changed. (Carry out initial parameterization only in powered-down status).
- The lock and key mechanism must not be activated
  (Deactivation by parameter reset to factory setting).

8.1 Parameter input via the PMU

The PMU parameterizing unit enables parameterization, operator control and visualization of the converters and inverters directly on the unit itself. It is an integral part of the basic units. It has a four-digit seven-segment display and several keys.

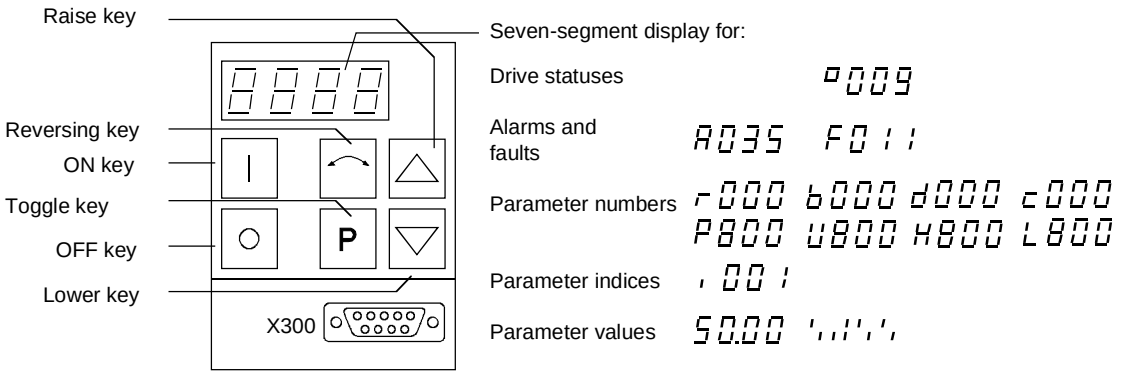

Fig. 8-1 PMU parameterizing unit

Key	Significance	Function
|	ON key	• For energizing the drive (enabling motor activation). • If there is a fault: For returning to fault display
○	OFF key	• For de-energizing the drive by means of OFF1, OFF2 or OFF3 (P554 to 560) depending on parameterization.
⌒	Reversing key	• For reversing the direction of rotation of the drive. The function must be enabled by P571 and P572
P	Toggle key	• For switching between parameter number, parameter index and parameter value in the sequence indicated (command becomes effective when the key is released). • If fault display is active: For acknowledging the fault
△	Raise key	For increasing the displayed value: • Short press = single-step increase • Long press = rapid increase
▽	Lower key	For lowering the displayed value: • Short press = single-step decrease • Long press = rapid decrease
P + △	Hold toggle key and depress raise key	• If parameter number level is active: For jumping back and forth between the last selected parameter number and the operating display (r000) • If fault display is active: For switching over to parameter number level • If parameter value level is active: For shifting the displayed value one digit to the right if parameter value cannot be displayed with 4 figures (left-hand figure flashes if there are any further invisible figures to the left)
P + ▽	Hold toggle key and depress lower key	• If parameter number level is active: For jumping directly to the operating display (r000) • If parameter value level is active: For shifting the displayed value one digit to the left if parameter value cannot be displayed with 4 figures (right-hand figure flashes if there are any further invisible figures to the right)

Table 8-1 Operator control elements on the PMU

Toggle key (P key)

As the PMU only has a four-digit seven-segment display, the 3 descriptive elements of a parameter

- Parameter number,
- Parameter index (if parameter is indexed) and
- Parameter value

cannot be displayed at the same time. For this reason, you have to switch between the individual descriptive elements by depressing the toggle key. After the desired level has been selected, adjustment can be made using the raise key or the lower key.

With the toggle key, you can change over:

- from the parameter number to the parameter index
- from the parameter index to the parameter value
- from the parameter value to the parameter number

If the parameter is not indexed, you can jump directly to the parameter value.

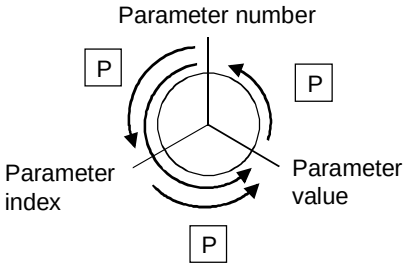

NOTE

If you change the value of a parameter, this change generally becomes effective immediately. It is only in the case of acknowledgement parameters (marked in the parameter list by an asterisk ‘ * ’) that the change does not become effective until you change over from the parameter value to the parameter number.

Parameter changes made using the PMU are always safely stored in the EEPROM (protected in case of power failure) once the toggle key has been depressed.

Example The following example shows the individual operator control steps to be carried out on the PMU for a parameter reset to factory setting.

Set P053 to 0002 and grant parameter access for PMU

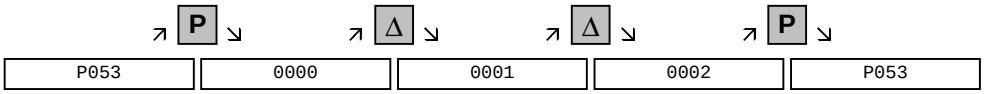

Select P060

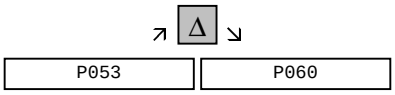

Set P060 to 0002 and select "Fixed settings" menu

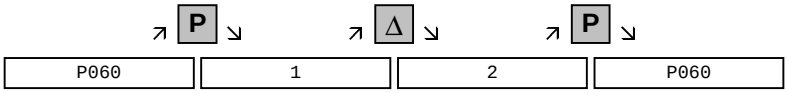

Select P970

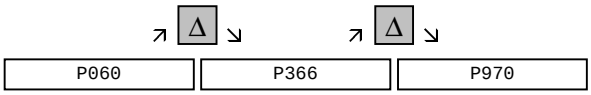

Set P970 to 000 and start parameter reset

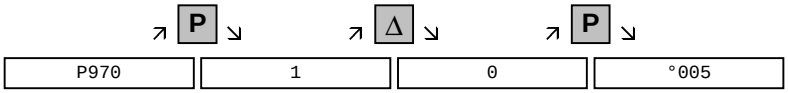

8.2 Parameter input via the OP1S

The operator control panel (OP1S) is an optional input/output device which can be used for parameterizing and starting up the units. Plain-text displays greatly facilitate parameterization.

The OP1S has a non-volatile memory and can permanently store complete sets of parameters. It can therefore be used for archiving sets of parameters, but first the parameter sets must be read out (upread) from the units. Stored parameter sets can also be transferred (downloaded) to other units.

The OP1S and the unit to be operated communicate with each other via a serial interface (RS485) using the USS protocol. During communication, the OP1S assumes the function of the master whereas the connected units function as slaves.

The OP1S can be operated at baud rates of 9.6 kBd and 19.2 kBd, and is capable of communicating with up to 32 slaves (addresses 0 to 31). It can therefore be used in a point-to-point link (e.g. during initial parameterization) or within a bus configuration.

The plain-text displays can be shown in one of five different languages (German, English, Spanish, French, Italian). The language is chosen by selecting the relevant parameter for the slave in question.

Order numbers

Components	Order Number
OP1S	6SE7090-0XX84-2FK0
Connecting cable 3 m	6SX7010-0AB03
Connecting cable 5 m	6SX7010-0AB05
Adapter for installation in cabinet door incl. 5 m cable	6SX7010-0AA00

NOTE

The parameter settings for the units connected to the OP1S are given in the corresponding documentation of the unit (Compendium).

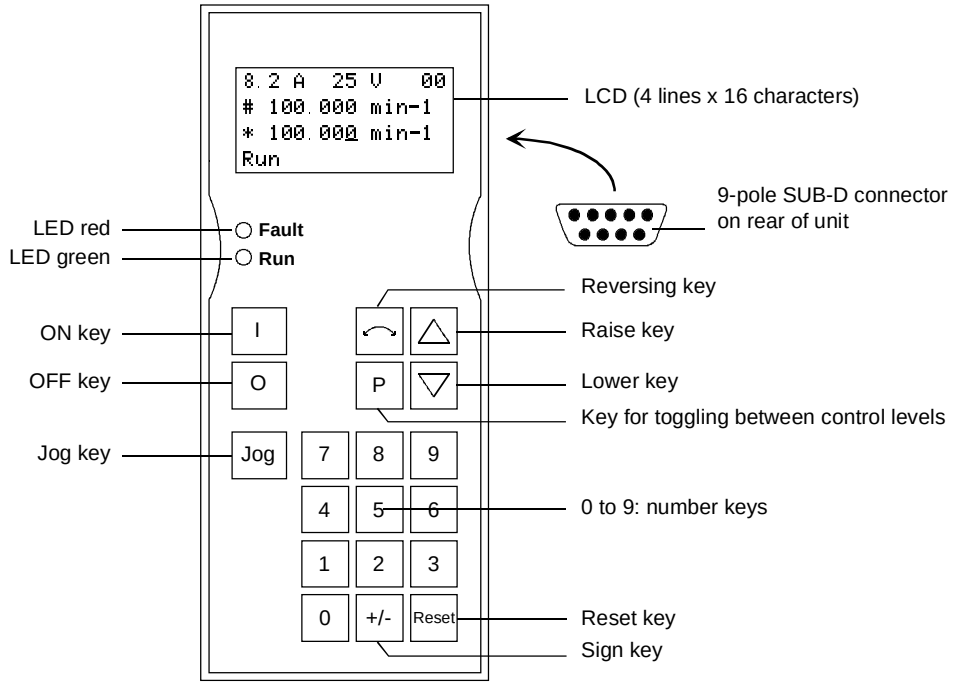

Fig. 8-2 View of the OP1S

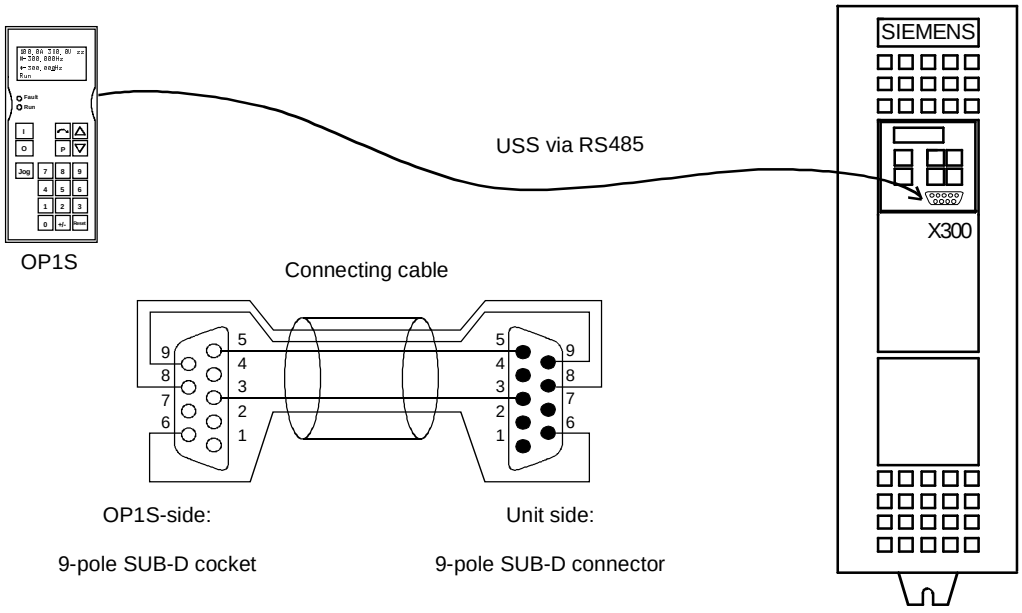

Fig. 8-3 The OP1S directly connected to the unit

NOTE

In the as-delivered state or after a reset of the parameters to the factory setting, a point-to-point link can be adopted with the OP1S without any further preparatory measures and parameterization can be commenced.

Key	Significance	Function
I	ON key	• For energizing the drive (enabling motor activation). The function must be enabled by means of parameterization.
O	OFF key	• For de-energizing the drive by means of OFF1, OFF2 or OFF3, depending on parameterization. This function must be enabled by means of parameterization.
Jog	Jog key	• For jogging with jogging setpoint 1 (only effective when the unit is in the "ready to start" state). This function must be enabled by means of parameterization.
	Reversing key	• For reversing the direction of rotation of the drive. The function must be enabled by means of parameterization.
P	Toggle key	• For selecting menu levels and switching between parameter number, parameter index and parameter value in the sequence indicated. The current level is displayed by the position of the cursor on the LCD display (the command comes into effect when the key is released). • For conducting a numerical input
Reset	Reset key	• For leaving menu levels • If fault display is active, this is for acknowledging the fault. This function must be enabled by means of parameterization.
△	Raise key	For increasing the displayed value: • Short press = single-step increase • Long press = rapid increase • If motorized potentiometer is active, this is for raising the setpoint. This function must be enabled by means of parameterization
▽	Lower key	For lowering the displayed value: • Short press = single-step decrease • Long press = rapid decrease • If motorized potentiometer is active, this is for lowering the setpoint. This function must be enabled by means of parameterization.
+/-	Sign key	• For changing the sign so that negative values can be entered
9 to 0	Number keys	• Numerical input

Table 8-2 Operator control elements of the OP1S

NOTE

If you change the value of a parameter, the change does not become effective until the toggle key (P) is pressed.

Parameter changes made using the OP1S are always stored safely in the EEPROM (protected in case of power failure) once the toggle key has been pressed.

Some parameters may also be displayed without a parameter number, e.g. during quick parameterization or if "Fixed setting" is selected. In this case, parameterization is carried out via various sub-menus.

Example of how to proceed for a parameter reset.

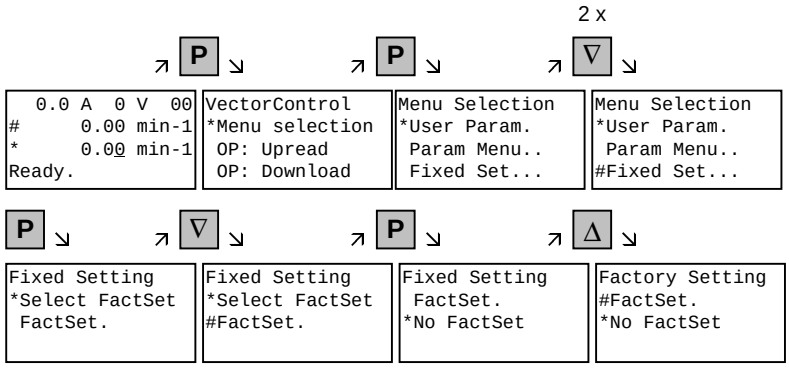

Selection of factory setting

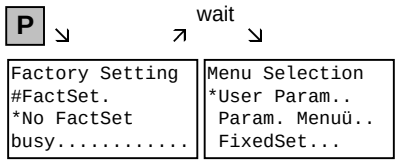

Start of factory setting

NOTE It is not possible to start the parameter reset in the "Run" status.

8.3 Parameterizing by download

Downloading with the OP1S

The OP1S operator control panel is capable of upreading parameter sets from the units and storing them. These parameter sets can then be transferred to other units by download. Downloading with the OP1S is thus the preferred method of parameterizing replacement units in a service case.

During downloading with the OP1S, it is assumed that the units are in the as-delivered state. The parameters for power section definition are thus not transferred. (Refer to Section "Detailed parameterization, power section definition")

With the "OP: Download" function, a parameter set stored in the OP1S can be written into the connected slave. Starting from the basic menu, the "OP: Download" function is selected with "Lower" or "Raise" and activated with "P".

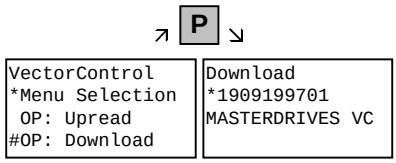

Example: Selecting and activating the "Download" function

One of the parameter sets stored in the OP1S must now be selected with "Lower" or "Raise" (displayed in the second line). The selected ID is confirmed with "P". The slave ID can now be displayed with "Lower" or "Raise" (see section "Slave ID"). The "Download" procedure is then started with "P". During download, the OP1S displays the currently written parameter.

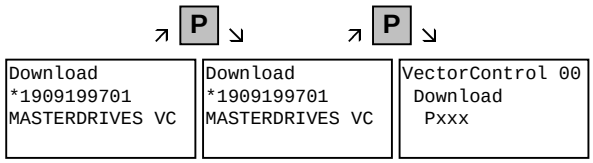

Example: Confirming the ID and starting the "Download" procedure

With "Reset", the procedure can be stopped at any time. If downloading has been fully completed, the message "Download ok" appears and the display returns to the basic menu.

After the data set to be downloaded has been selected, if the identification of the stored data set does not agree with the identification of the connected unit, an error message appears for approximately 2 seconds. The operator is then asked if downloading is to be discontinued.

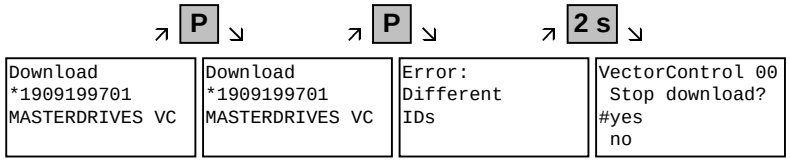

Yes: Downloading is discontinued.

No: Downloading is carried out.

9 Parameterizing steps

Detailed parameterization

In general, parameterization can be subdivided into the following main steps:

1. Power section definition (P060 = 8)
2. Board definition (P060 = 4)
3. Drive definition (P060 = 5)
4. Function adjustment.

Not all parameterizing steps have to be run through in detail in each case during start-up. It is possible under certain conditions to combine some of the steps and shorten parameterization by using quick procedures. The following quick procedures are possible:

Quick parameterization

1. Parameterizing with user settings
   (Fixed setting or factory setting, P060 = 2)
2. Parameterizing with existing parameter files
   (Download, P060 = 6)
3. Parameterizing with paramater modules
   (Quick parameterization, P060 = 3)

Depending on the specific prevailing conditions, parameterization can be carried out either in detail or in accordance with one of the specified quick procedures.

By activating a fixed setting (P060 = 2), the parameters of the unit can also be reset to the original values.

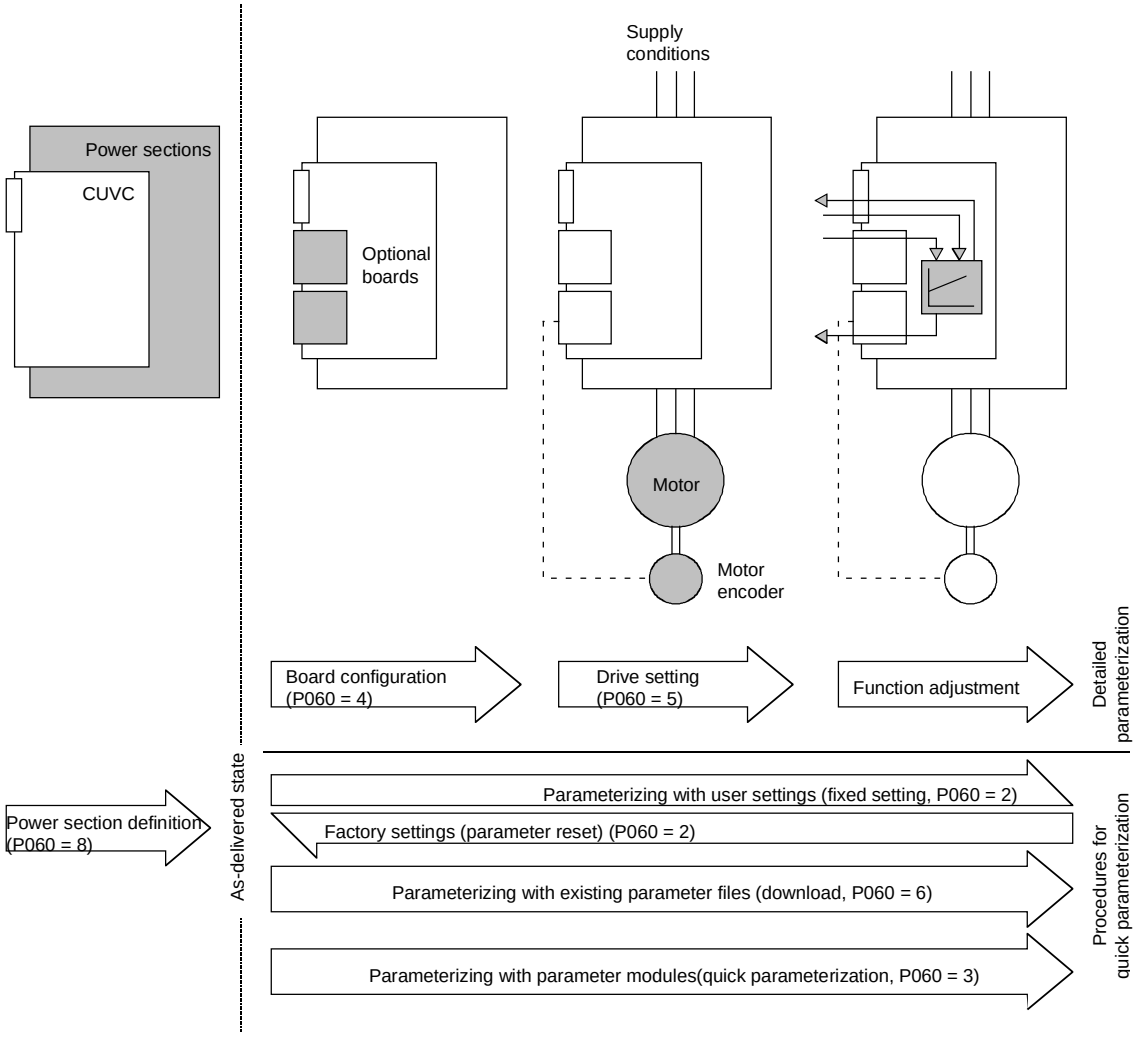

Fig. 9-1 Detailed and quick parameterization

9.1 Parameter reset to factory setting

The factory setting is the defined initial state of all parameters of a unit. The units are delivered with this setting.

You can restore this initial state at any time by resetting the parameters to the factory setting, thus canceling all parameter changes made since the unit was delivered.

The parameters for defining the power section and for releasing the technology options and the operating hours counter and fault memory are not changed by a parameter reset to factory setting.

Parameter number	Parameter name
P070	Order No. 6SE70..
P072	Rtd Drive Amps
P073	Rtd Drive Power
P366	Select FactSet

Table 9-1 Parameters which are not changed by the factory setting

NOTE

Parameter factory settings which are dependent on converter or motor parameters are marked with '(~)' in the block diagrams.

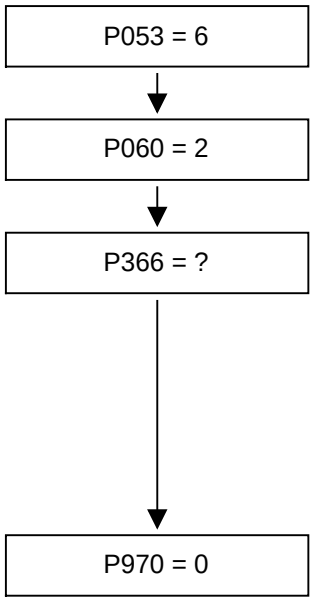

Grant parameter access
6: Parameter changes permitted via PMU and serial interface SCom1 (OP1S and PC)

Select "Fixed settings" menu

Select desired factory setting
0: Standard
1: Standard with OP1S
2: Cabinet unit with OP1S (BICO1) or terminal strip (BICO2)
3: Cabinet unit with PMU (BICO1) or terminal strip (BICO2)
4: Cabinet unit with NAMUR terminal strip (SCI)
Note: This parameter was correctly set prior to delivery of the unit and only needs to be changed in exceptional cases.

Start parameter reset
0: Parameter reset
1: No parameter change

Fig. 9-2 Sequence for parameter reset to factory setting

Factory settings dependent on P366

Parameters dependent on P366	Designation of the parameter on the OP1S (Src = Source)	Normal factory setting		Factory setting with OP1S		Cabinet unit with OP1S or terminal strip		Cabinet unit with PMU or terminal strip		Cabinet unit with NAMUR terminal strip (SCI)	
		P366 = 0		P366 = 1		P366 = 2		P366 = 3		P366 = 4	
		BICO1 (i001)	**BICO2 (i002)**	**BICO1 (i001)**	**BICO2 (i002)**	**BICO1 (i001)**	**BICO2 (i002)**	**BICO1 (i001)**	**BICO2 (i002)**	**BICO1 (i001)**	**BICO2 (i002)**
P443	Src MainSetpoint	KK058	KK040	KK040	KK040	KK040	KK040	KK058	KK040	KK058	K4101
P554	Src ON/OFF1	B0005	B0022	B2100	B0022	B2100	B0022	B0005	B0022	B2100	B4100
P555	Src1 OFF2	B0001	B0020	B0001	B0020	B0001	B0001	B0001	B0001	B0001	B0001
P556	Src2 OFF2	B0001	B0001	B0001	B0001	B0001	B0001	B0001	B0001	B0001	B4108
P565	Src1 Fault Reset	B2107	B2107	B2107	B2107	B2107	B2107	B2107	B2107	B2107	B2107
P566	Src2 Fault Reset	B0000	B0000	B0000	B0000	B0000	B0000	B0000	B0000	B4107	B4107
P567	Src3 Fault Reset	B0000	B0018	B0000	B0018	B0000	B0010	B0000	B0010	B0000	B0000
P568	Src Jog Bit0	B0000	B0000	B2108	B0000	B2108	B0000	B0000	B0000	B0000	B0000
P571	Src FWD Speed	B0001	B0001	B2111	B0001	B2111	B0001	B0001	B0001	B0001	B0001
P572	Src REV Speed	B0001	B0001	B2112	B0001	B2112	B0001	B0001	B0001	B2112	B4109
P573	Src MOP UP	B0008	B0000	B0008	B0000	B0008	B0000	B0008	B0000	B2113	B4105
P574	Src MOP Down	B0009	B0000	B0009	B0000	B0009	B0000	B0009	B0000	B2114	B4106
P575	Src No ExtFault1	B0001	B0001	B0001	B0001	B0018	B0018	B0018	B0018	B0018	B0018
P588	Src No Ext Warn1	B0001	B0001	B0001	B0001	B0020	B0020	B0020	B0020	B0020	B0020
P590	Src BICO DSet	B0014	B0014	B0014	B0014	B0012	B0012	B0012	B0012	B4102	B4102
P651	Src DigOut1	B0107	B0107	B0107	B0107	B0000	B0000	B0000	B0000	B0107	B0107
P652	Src DigOut2	B0104	B0104	B0104	B0104	B0000	B0000	B0000	B0000	B0104	B0104
P653	Src DigOut3	B0000	B0000	B0000	B0000	B0107	B0107	B0107	B0107	B0000	B0000
P693.1	SCI AnaOutActV 1	K000	K000	K000	K000	K000	K000	K000	K000	KK020	KK020
P693.2	SCI AnaOutActV 2	K0000	K0000	K0000	K0000	K0000	K0000	K0000	K0000	K0022	K0022
P693.3	SCI AnaOutActV 3	K0000	K0000	K0000	K0000	K0000	K0000	K0000	K0000	K0024	K0024
P698.1	Src SCI DigOut 1	B0000	B0000	B0000	B0000	B0000	B0000	B0000	B0000	B0100	B0100
P698.2	Src SCI DigOut 2	B0000	B0000	B0000	B0000	B0000	B0000	B0000	B0000	B0120	B0120
P698.3	Src SCI DigOut 3	B0000	B0000	B0000	B0000	B0000	B0000	B0000	B0000	B0108	B0108
P698.4	Src SCI DigOut 4	B0000	B0000	B0000	B0000	B0000	B0000	B0000	B0000	B0107	B0107
P704.3	SCom TlgOFF SCB	0 ms	0 ms	0 ms	0 ms	0 ms	0 ms	0 ms	0 ms	100ms	100ms
P796	Compare Value	100.0	100.0	100.0	100.0	100.0	100.0	100.0	100.0	2.0	2.0
P797	Compare Hyst	3.0	3.0	3.0	3.0	3.0	3.0	3.0	3.0	1.0	1.0
P049.4	OP OperDisp	r229	r229	P405	P405	P405	P405	r229	r229	r229	r229

Table 9-2 Factory setting dependent on P366

All other factory setting values are not dependent on P366 and can be taken from the parameter list or from the block diagrams (in the Compendium).

The factory settings for Index 1 of the respective parameter are displayed in the parameter list.

Significance of the binectors and connectors for factory setting:

Entry	Description	See function diagram (in Compendium)
B0000	Fixed binector 0	-15.4-
B0001	Fixed binector 1	-15.4-
B0005	PMU ON/OFF	-50.7-
B0008	PMU MOP UP	-50.7-
B0009	PMU MOP DOWN	-50.7-
B0010	DigIn1	-90.4-
B0012	DigIn2	-90.4-
B0014	DigIn3	-90.4-
B0016	DigIn4	-90.4-
B0018	DigIn5	-90.4-
B0020	DigIn6	-90.4-
B0022	DigIn7	-90.4-
B0100	Rdy for ON	-200.5-
B0104	Operation	-200.5-
B0107	No fault	-200.6-
B0108	No OFF2	-200.5-
B0120	CompV OK	-200.5-
B2100	SCom1 Word1 Bit0	-100.8-
...		
B2115	SCom1 Word1 Bit15	-100.8-
B4100	SCI1 Sl1 DigIn	-Z10.7- / -Z30.4-
...		
B4115	SCI1 Sl1 DigIn	-Z30.8-
r229	n/f(set,smooth)	-360.4- / -361.4- / -362.4- / -363.4- / -364.4-
P405	Fixed setpoint 5	-290.3-
KK0020	Speed (smoothed)	-350.8- / -351.8- / -352.8-
K0022	Output Amps (smoothed)	-285.8- / -286.8-
K0024	Torque (smoothed)	-285.8-
KK0040	Current FixSetp	-290.6-
KK0058	MOP (Output)	-300.8-

Bxxxx =	Binector =	freely assignable digital signal (values 0 and 1)
Kxxxx =	Connector =	freely assignable 16-bit signal (4000h = 100 %)
KKxxxx =	Double connector =	freely assignable 32-bit signal (4000 0000h = 100 %)

9.2 Quick parameterization procedures

The following quick procedures are always used in cases where the application conditions of the units are exactly known and no tests and related extensive parameter corrections are required. Typical examples of applications for quick parameterization are when units are installed in standard machines or when a unit needs replacing.

9.2.1 Parameterizing with user settings

During parameterization by selecting user-specific fixed settings, the parameters of the unit are described with values which are permanently stored in the software. In this manner, it is possible to carry out the complete parameterization of the units in one step just by setting a few parameters.

The user-specific fixed settings are not contained in the standard firmware; they have to be compiled specifically for the customer.

NOTE

If you are interested in the provision and implementation of fixed settings tailored to your own requirements, please get in contact with your nearest SIEMENS branch office.

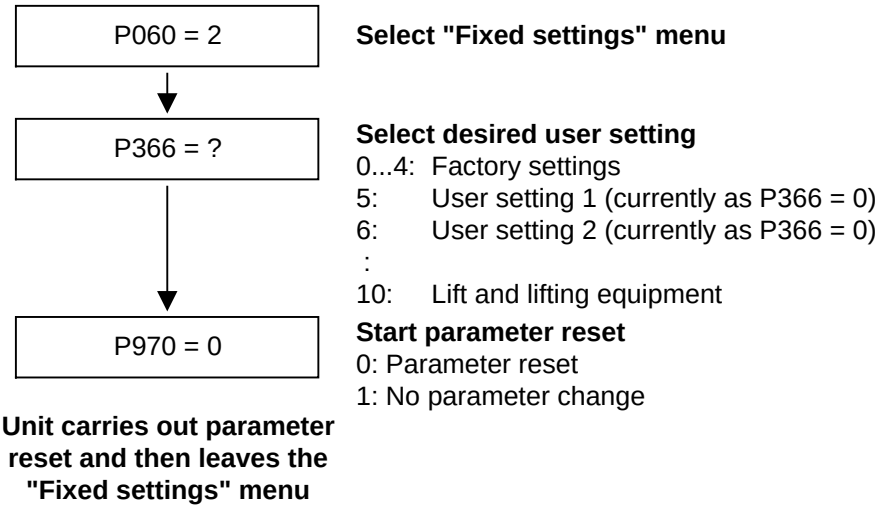

Fig. 9-3 Sequence for parameterizing with user settings

9.2.2 Parameterizing by loading parameter files (download P060 = 6)

Download

When parameterizing with download, the parameter values stored in a master unit are transferred to the unit to be parameterized via a serial interface. The following can serve as master units:

1. OP1S operator control panel
2. PCs with SIMOVIS service program
3. Automation units (e.g. SIMATIC)

The interface SCom1 or SCom2 with USS protocol of the basic unit and field bus interfaces used for parameter transfer (e.g. CBP for PROFIBUS DP) can serve as serial interfaces.

Using download, all changeable parameters can be set to new values.

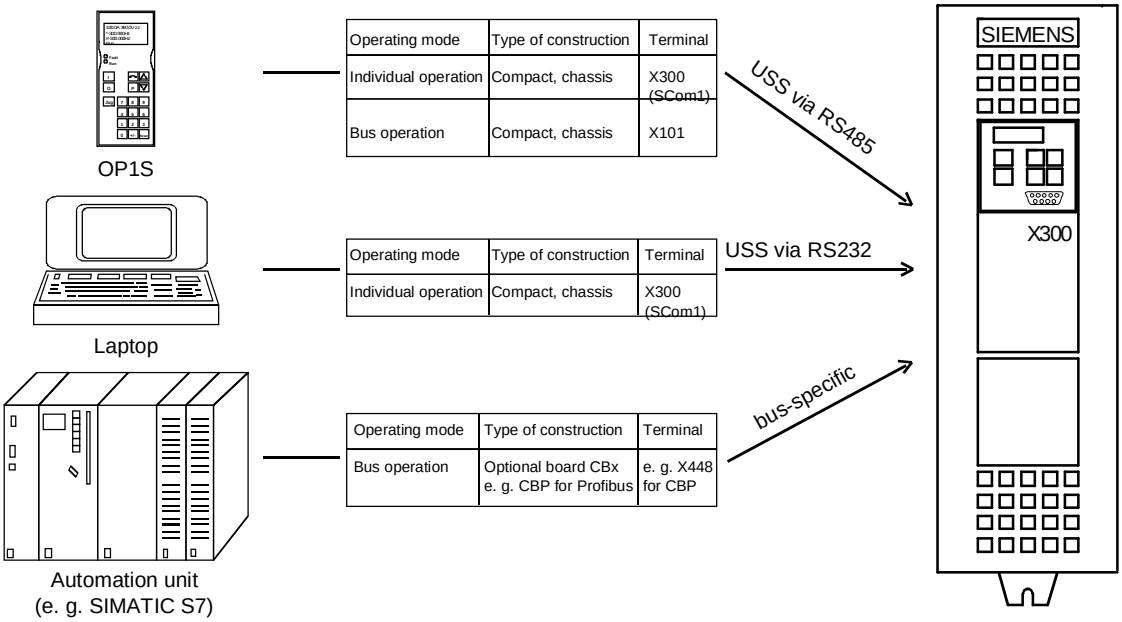

Fig. 9-4 Parameter transfer from various sources by download

Downloading with the OP1S

The OP1S operator control panel is capable of upreading parameter sets from the units and storing them. These parameter sets can then be transferred to other units by download. Downloading with the OP1S is thus the preferred method of parameterizing replacement units in a service case.

During downloading with the OP1S, it is assumed that the units are in the as-delivered state. The parameters for power section definition are thus not transferred. (Refer to Section "Detailed parameterization, power section definition")

Parameter number	Parameter name
P060	Menu selection
P070	Order No. 6SE70..
P072	Rtd Drive Amps(n)
P073	Rtd Drive Power(n)

Table 9-3 Parameters you cannot overwrite during download

The OP1S operator control panel also stores and transfers parameters for configuring the USS interface (P700 to P704). Depending on the parameterization of the unit from which the parameter set was originally upread, communication between the OP1S and the unit can be interrupted on account of changed interface parameters after downloading has been completed. To enable communication to re-commence, briefly interrupt the connection between the OP1S and the unit (disconnect OP1S or the cable). The OP1S is then newly initialized and adjusts itself after a short time to the changed parameterization via the stored search algorithm.

Download with SIMOVIS

By using the SIMOVIS PC program, you can upread parameter sets from the units, store them on the hard disk or on floppy disks and transfer them back to the units by download. You have the additional possibility of editing the parameters off-line and of creating parameter files especially for your application. These files do not have to contain the complete parameter scope. They can be limited to parameters which are relevant for the particular application.

NOTE

Successful parameterization of the units by download is only ensured if the unit is in the "Download" status when the data is being transferred. Transition into this status is achieved by selecting the "Download" menu in P060.

P060 is automatically set to 6 after the download function has been activated in the OP1S or in the SIMOVIS service program.

If the CUVC of a converter is replaced, the power section definition has to be carried out before parameter files are downloaded.

If only parts of the entire parameter list are transferred by download, the parameters of the following table must always be transferred too, as these automatically result during the drive setting from the input of other parameters. During download, however, this automatic adjustment is not carried out.

Parameter number	Parameter name
P109	Pole pair number
P352	Reference frequency = P353 x P109 / 60
P353	Reference frequency = P352 x 60 / P109

Table 9-4 Parameters which always have to be loaded during download

If parameter P115 = 1 is set during download, the automatic parameterization is then carried out (according to the setting of parameter P114). In the automatic parameterization, the controller settings are calculated from the data of the motor rating plate.

If the following parameters are changed during download, they are not then re-calculated by the automatic parameterization:

P116, P128, P215, P216, P217, P223, P235, P236, P240, P259, P278, P279, P287, P295, P303, P313, P396, P471, P525, P602, P603.

9.2.3 Parameterizing with parameter modules (quick parameterization, P060 = 3)

Pre-defined, function-assigned parameter modules are stored in the units. These parameter modules can be combined with each other, thus making it possible to adjust your unit to the desired application by just a few parameter steps. Detailed knowledge of the complete parameter set of the unit is not required.

Parameter modules are available for the following function groups:

1. Motors (input of the rating plate data with automatic parameterization of open-loop and closed-loop control)
2. Open-loop and closed-loop control types
3. Setpoint and command sources

Parameterization is effected by selecting a parameter module from each function group and then starting quick parameterization. In accordance with your selection, the necessary unit parameters are set to produce the desired control functionality. The parameters necessary for fine adjustment of the control structure (all the parameters of the respective function diagrams) are automatically adopted in the user menu (P060 = 0).

NOTE

Parameterizing with parameter modules is carried out only in BICO data set 1 and in function and motor data set 1.

Quick parameterization is effected in the "Download" converter status.

Function diagram modules

Function diagram modules (function diagrams) are shown after the flow chart for parameter modules stored in the unit software. On the first few pages are the :

- setpoint and command sources, on the following pages are the
- analog outputs and the display parameters and the
- open-loop and closed-loop control types.

It is therefore possible to put together the function diagrams to exactly suit the selected combination of setpoint/command source and open/closed-loop control type. This will give you an overview of the functionality parameterized in the units and of the necessary assignment of the terminals.

The function parameters and visualization parameters specified in the function diagrams are automatically adopted in the user menu and can be visualized or changed there.

The parameter numbers of the user menu are entered in P360.

Reference is made in the function diagrams to the respective function diagram numbers (Sheet [xxx]) of the detail diagrams (in the Compendium).

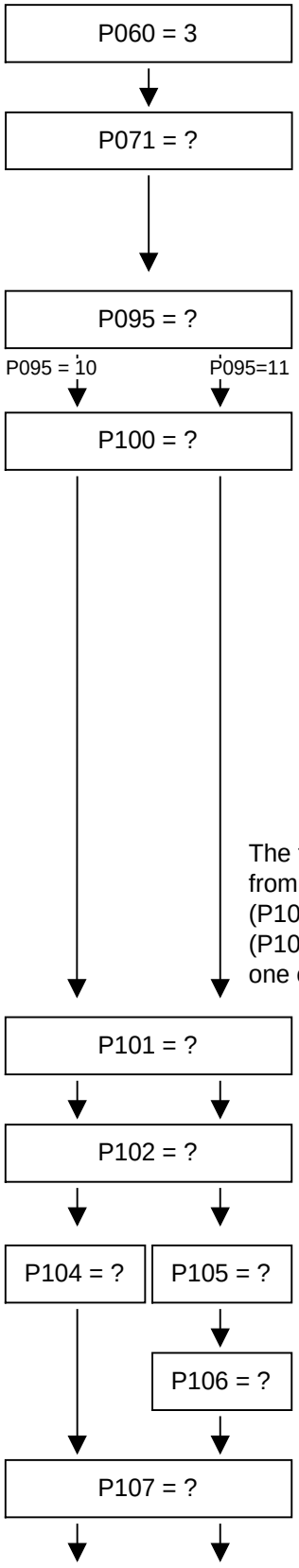

Select "Drive setting" menu
Menu selection "Quick parameterization"

Input unit line voltage in V
AC units: r.m.s. alternating voltage
DC units: DC link voltage
The input is important, e.g. for voltage limitation control (Vdmax control, P515 = 1)

Enter the motor type
10: Async. IEC (international standard)
11: Async. NEMA (US standard)

Enter the open/closed-loop control type (sheet r0...r5)
0: v/f open-loop control + n-controller with pulse encoder (P130 = 11)
1: v/f open-loop control
2: v/f open-loop control, textile
3: Vector control without tachometer (f-control)
4: Vector control with tachometer (n-speed)
with pulse encoder (P130 = 11)
5: Torque control (M control)
with pulse encoder (P130 = 11)
For v/f control (0..2), a linear curve will be set in P330 (P330 = 1: parabolic).
The pulse encoder has a pulse number of P151 = 1024 per revolution.

The following inputs of motor data are necessary if the motor deviates from the converter data, if one of the vector control types (P100 = 3, 4, 5) has been selected, or if speed feedback is used (P100 = 0). In the case of motor outputs higher than approx. 200 kW, one of the vector control types should be used.

Enter the rated motor voltage in V
as per rating plate

Enter the rated motor current in A
as per rating plate
(group drives: total of all motor currents)

IEC motor: Cos (phi) as per rating plate
NEMA motor: nominal rating [Hp]
(group drives: total of all ratings)

Enter the motor efficiency in %
as per rating plate

Enter the rated motor frequency in Hz
as per rating plate

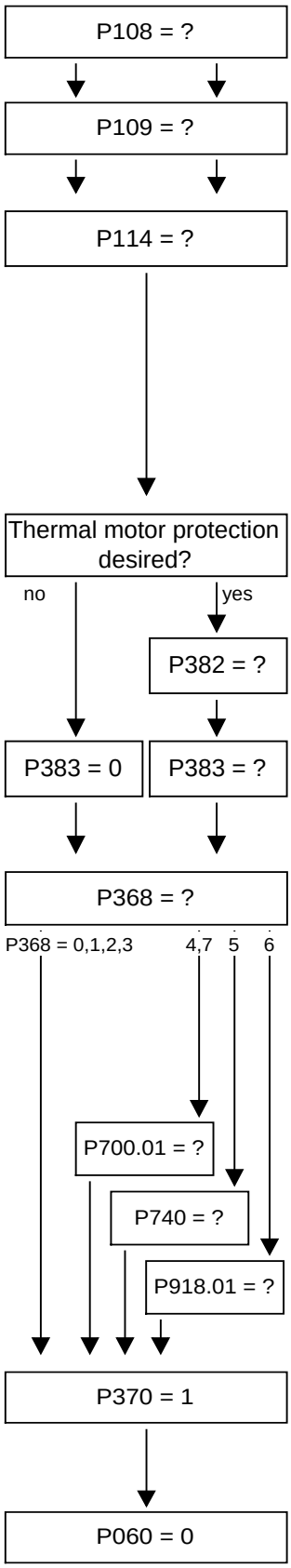

Enter the rated motor speed in rpm
as per rating plate

Enter the motor pole pair number
(is automatically calculated)

Only for vector control:
Process-related boundary conditions for control
0: Standard drives (default)
1: Torsion, gear play
2: Acceleration drives
3: Load surge
4: Smooth running characteristics
5: Efficiency optimization
6: Heavy-duty starting
See section "Drive setting"

System with motor protection according to UL regulation?
The motor temperature is calculated via the motor current.
(In the pre-setting, motor overload protection in accordance with UL regulation is activated!)

Specify motor cooling
0: self-ventilated
1: forced-ventilated

Enter the thermal time constant of the motor in s
The values can be taken from the table on the next page.
The motor load limit (P384.2) is pre-assigned to 100 %.

Select setpoint and command source (sheet s0...s4, s7)
0: PMU + MOP
1: Analog and digital inputs on the terminal strip
2: Fixed setpoints and digital inputs on the terminal strip
3: MOP and digital inputs on the terminal strip
4: USS1 (e.g. with SIMATIC)
5: SIMOLINK (SLB) (without fig.)
6: PROFIBUS (CBP) (without fig.)
7: OP1S and fixed setpoints via SCom1 (X300: PMU)

Enter the USS bus address

Enter the SIMOLINK module address

Enter the PROFIBUS address

Start of quick parameterization
0: No parameter change
1: Parameter change in accordance with selected combination of parameter modules (automatic factory setting according to P366 = 0)

Return to the user menu
End of quick parameterization

P383 Mot Tmp T1 Thermal time constant of the motor

Setting notes

Activation of the i^2t calculation is made by setting a parameter value >= 100 seconds.

Example: for a 1LA5063 motor, 2-pole design, the value 480 seconds has to be set.

The thermal time constants for Siemens standard motors are given in the following table in seconds:

1LA-/1LL motors

Type	2-pole	4-pole	6-pole	8-pole	10-pole	12-pole
1LA5063	480	780	-	-	-	-
1LA5070	480	600	720	-	-	-
1LA5073	480	600	720	-	-	-
1LA5080	480	600	720	-	-	-
1LA5083	600	600	720	-	-	-
1LA5090	300	540	720	720	-	-
1LA5096	360	660	720	840	-	-
1LA5106	480	720	720	960	-	-
1LA5107	-	720	-	960	-	-
1LA5113	840	660	780	720	-	-
1LA5130	660	600	780	600	-	-
1LA5131	660	600	-	-	-	-
1LA5133	-	600	840	600	-	-
1LA5134	-	-	960	-	-	-
1LA5163	900	1140	1200	720	-	-
1LA5164	900	-	-	-	-	-
1LA5166	900	1140	1200	840	-	-
1LA5183	1500	1800	-	-	-	-
1LA5186	-	1800	2400	2700	-	-
1LA5206	1800	-	2700	-	-	-
1LA5207	1800	2100	2700	3000	-	-
1LA6220	-	2400	-	3300	-	-
1LA6223	2100	2400	3000	3300	-	-
1LA6253	2400	2700	3000	3600	-	-
1LA6280	2400	3000	3300	3900	-	-
1LA6283	2400	3000	3300	3900	-	-
1LA6310	2700	3300	3600	4500	-	-
1LA6313	-	3300	3600	4500	-	-
1LA831.	2100	2400	2700	2700	3000	3000
1LA835.	2400	2700	3000	3000	3300	3300
1LA840.	2700	3000	3300	3300	3600	3600

Type	2-pole	4-pole	6-pole	8-pole	10-pole	12-pole
1LA845.	3300	3300	3600	3600	4200	4200
1LL831.	1500	1500	1800	1800	2100	2100
1LL835.	1800	1800	2100	2100	2400	2400
1LL840.	2100	2100	2100	2100	2400	2400
1LL845.	2400	2100	2400	2400	2700	2700
1LA135.	1800	2100	2400	-	-	-
1LA140.	2100	2400	2700	2700	-	-
1LA145.	2400	2700	3000	3000	3300	3300
1LA150.	3000	3000	3300	3300	3900	3900
1LA156.	3600	3300	3600	3600	4200	4200
1LL135.	1200	1200	1500	-	-	-
1LL140.	1500	1500	1800	1800	-	-
1LL145.	1800	1800	1800	1800	2100	2100
1LL150.	2100	1800	2100	2100	2400	2400
1LL156.	2400	2100	2100	2100	2400	2400

1LA7 motors

The data for 1LA5 motors are also applicable for 1LA7 motors with the same designation.

1PH6 motors

Type	1PH610	1PH613	1PH616	1PH618	1PH620	1PH622
T1 in s	1500	1800	2100	2400	2400	2400

Exceptions: 1PH610 at n = 1150 rpm: T1 = 1200 n

1PA6 motors

Shaft height	100	132	160	180	225
T1 in s	1500	1800	2100	2400	2400

1PL6 motors

Shaft height	180	225
T1 in s	1800	1800

Reference quantities

The reference quantities for current (P350), voltage (P351), frequency (P352), speed (P353) and torque (P354) are set to the rated quantities of the motor for displaying the visualization parameters and for calculating the connector values.

With this parameterization, it is possible to display signals up to twice the rated motor quantities. If this is not sufficient, change over to the "Drive setting" menu (P060 = 5) in order to adjust the reference quantities.

Example

P107 = 52.00 Hz	Rated motor frequency
P108 = 1500.0 rpm	Rated motor speed
P109 = 2	Motor pole pair number

Pre-assignment:

P352 = 52.00 Hz	Reference frequency
P353 = 1560 rpm	Reference speed

If the reference speed is to be 1500 rpm, you have to set parameter P353 to this value. The reference frequency is automatically adjusted (P352 = P353 / 60 x P109)

P352 = 50.00 Hz

P353 = 1500 1/min

A setpoint speed of 1500 rpm corresponds to a setpoint frequency of 50.00 Hz or an automation value of 100.0 %.

The representation area ends at 3000 rpm (2 x 1500 rpm).

Normally the reference speed has to be set to the required maximum speed.

If calculation is made with frequencies, not with speeds, the reference frequency has to be adjusted. The reference speed is automatically calculated (P353 = P352 x 60 / P109)

Reference frequencies of P352 = P107, P352 = 2 x P107, P352 = 4 x P107 are favourable for the calculating time.

Torque reference value

The reference value for torque can be set in P354.

The rated torque of the motor has to be set beforehand in P113. P113 does not have any influence on the torque accuracy of closed-loop control; it only affects signal representation.

Automatic motor identification

For exact determination of the motor parameters, it is possible to carry out automatic motor identification and speed controller optimization.

For this purpose, the procedures of the "Drive setting" have to be observed. If one of the vector control types (P100 = 3, 4, 5) of a converter without a sinusoidal output filter and of an induction motor without an encoder or with a pulse encoder (correct number of pulses in P151) is used, the motor identification procedure can be shortened. In this case, "Complete motor identification" has to be selected (P115 = 3) and the converter has to be powered up accordingly if the alarms A078 and A080 appear.

WARNING

During motor identification inverter pulses are released and the drive rotates!

For reasons of safety, identification should first be carried out without coupling of the load.

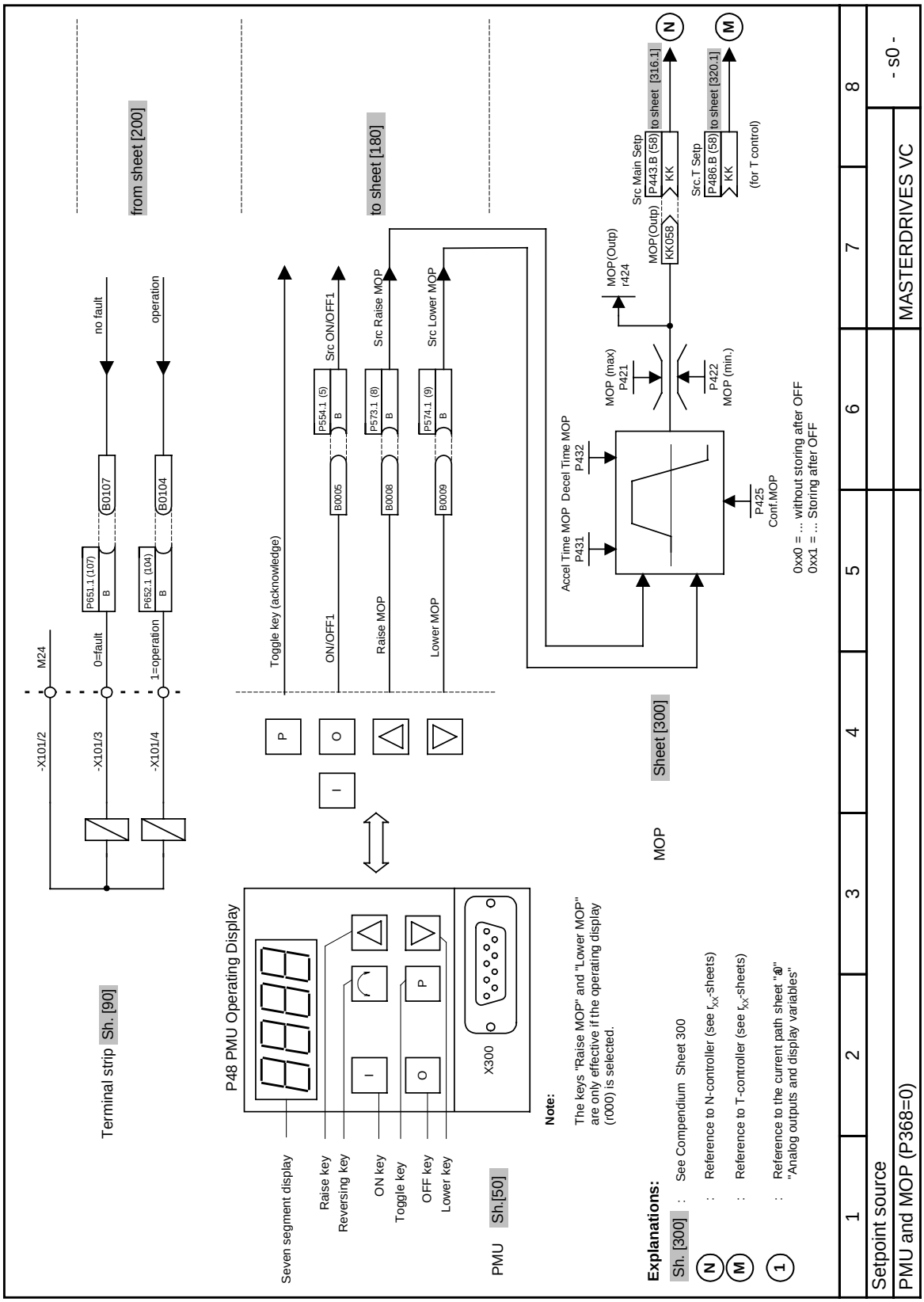
from sheet [200]
to sheet [180]
Terminal strip Sh. [90]
M24
-X101/2
-X101/3
-X101/4
0=fault
1=operation
P651.1 (107)
P652.1 (104)
B0107
B0104
no fault
operation
Toggle key (acknowledge)
ON/OFF1
Raise MOP
Lower MOP
Src ON/OFF1
Src Raise MOP
Src Lower MOP
P554.1 (5)
P573.1 (8)
P574.1 (9)
B0005
B0008
B0009
Accel Time MOP
Decel Time MOP
P431
P432
MOP (max)
P421
MOP (min.)
P422
P425
Conf.MOP
MOP(Outp)
r424
KK0058
Src Main Setp
P443.B (58)
Src.T Setp
P486.B (58)
to sheet [316.1]
to sheet [320.1]
(for T control)
0xx0 = ... without storing after OFF
0xx1 = ... Storing after OFF
P48 PMU Operating Display
X300
PMU Sh.[50]
Seven segment display
Raise key
Reversing key
ON key
Toggle key
OFF key
Lower key
Note:
The keys "Raise MOP" and "Lower MOP" are only effective if the operating display (r000) is selected.
MOP Sheet [300]
Explanations:
Sh. [300] : See Compendium Sheet 300
(N) : Reference to N-controller (see rXX-sheets)
(M) : Reference to T-controller (see rXX-sheets)
(1) : Reference to the current path sheet "0" "Analog outputs and display variables"
1 2 3 4 5 6 7 8
Setpoint source
PMU and MOP (P368=0)
MASTERDRIVES VC
- s0 -

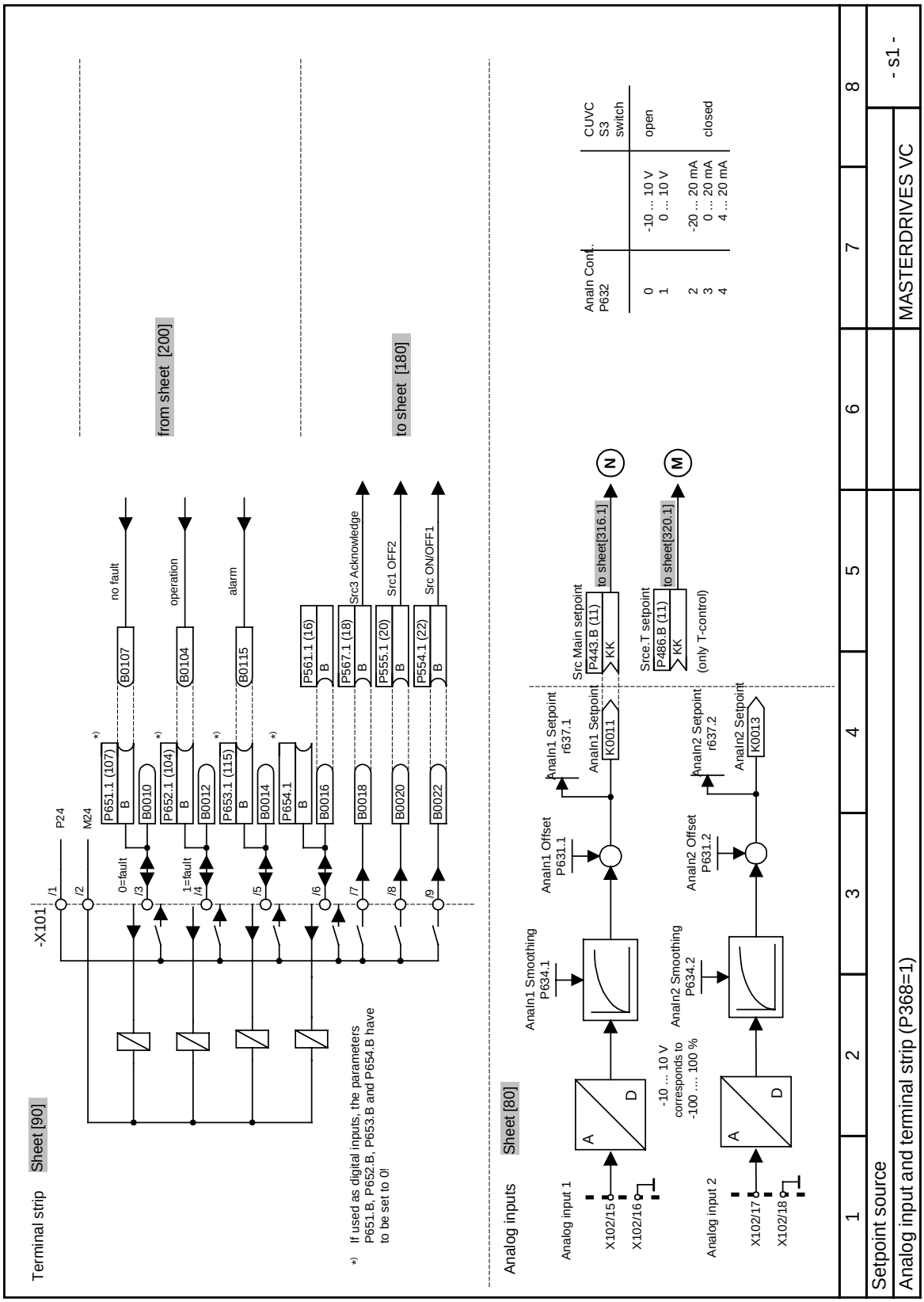
Terminal strip Sheet [90]
-X101
P24
M24
/1
/2
/3
/4
/5
/6
/7
/8
/9
0=fault
1=fault
P651.1 (107)
P652.1 (104)
P653.1 (115)
P654.1
B0010
B0012
B0014
B0016
B0018
B0020
B0022
B0107
B0104
B0115
no fault
operation
alarm
P561.1 (16)
P567.1 (18)
P555.1 (20)
P554.1 (22)
Src3 Acknowledge
Src1 OFF2
Src ON/OFF1
from sheet [200]
to sheet [180]
*) If used as digital inputs, the parameters P651.B, P652.B, P653.B and P654.B have to be set to 0!
Analog inputs Sheet [80]
Analog input 1
X102/15
X102/16
-10 ... 10 V corresponds to -100 .... 100 %
Analn Smoothing P634.1
Analn Offset P631.1
Analn1 Setpoint r637.1
Analn1 Setpoint K0011
Src Main setpoint P443.B (11) KK
to sheet[316.1]
Analog input 2
X102/17
X102/18
Analn2 Smoothing P634.2
Analn2 Offset P631.2
Analn2 Setpoint r637.2
Analn2 Setpoint K0013
Srce.T setpoint P486.B (11) KK
to sheet[320.1]
(only T-control)
Analn Conf. P632
CUVC S3 switch
0 -10 ... 10 V open
1 0 ... 10 V
2 -20 ... 20 mA closed
3 0 ... 20 mA
4 4 ... 20 mA
1 2 3 4 5 6 7 8
Setpoint source
Analog input and terminal strip (P368=1)
MASTERDRIVES VC
- s1 -

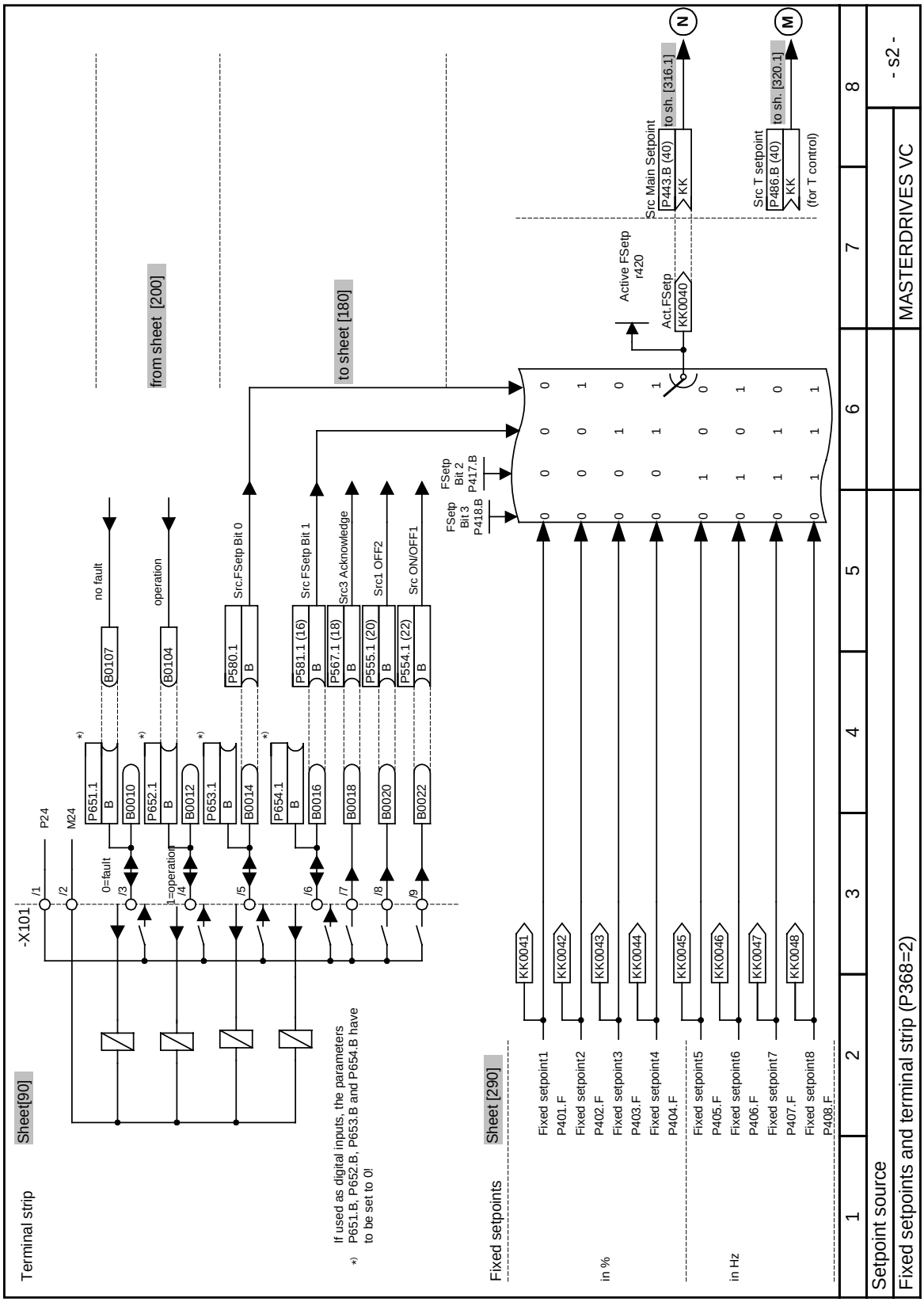
Terminal strip
Sheet[90]
-X101
P24
M24
/1
/2
/3
/4
/5
/6
/7
/8
/9
0=fault
1=operation
P651.1
P652.1
P653.1
P654.1
B0010
B0012
B0014
B0016
B0018
B0020
B0022
B0107
B0104
no fault
operation
P580.1
Src.FSetp Bit 0
P581.1 (16)
Src.FSetp Bit 1
P567.1 (18)
Src3 Acknowledge
P555.1 (20)
Src1 OFF2
P554.1 (22)
Src ON/OFF1
from sheet [200]
to sheet [180]
*) If used as digital inputs, the parameters P651.B, P652.B, P653.B and P654.B have to be set to 0!
Fixed setpoints
Sheet [290]
FSetp Bit 2 P417.B
FSetp Bit 3 P418.B
Active FSetp r420
Act.FSetp KK0040
Src Main Setpoint P443.B (40) KK
to sh. [316.1]
Src T setpoint P486.B (40) KK
(for T control)
to sh. [320.1]
KK0041 Fixed setpoint1 P401.F
KK0042 Fixed setpoint2 P402.F
KK0043 Fixed setpoint3 P403.F
KK0044 Fixed setpoint4 P404.F
in %
KK0045 Fixed setpoint5 P405.F
KK0046 Fixed setpoint6 P406.F
KK0047 Fixed setpoint7 P407.F
KK0048 Fixed setpoint8 P408.F
in Hz
1 2 3 4 5 6 7 8
Setpoint source
Fixed setpoints and terminal strip (P368=2)
MASTERDRIVES VC
- s2 -

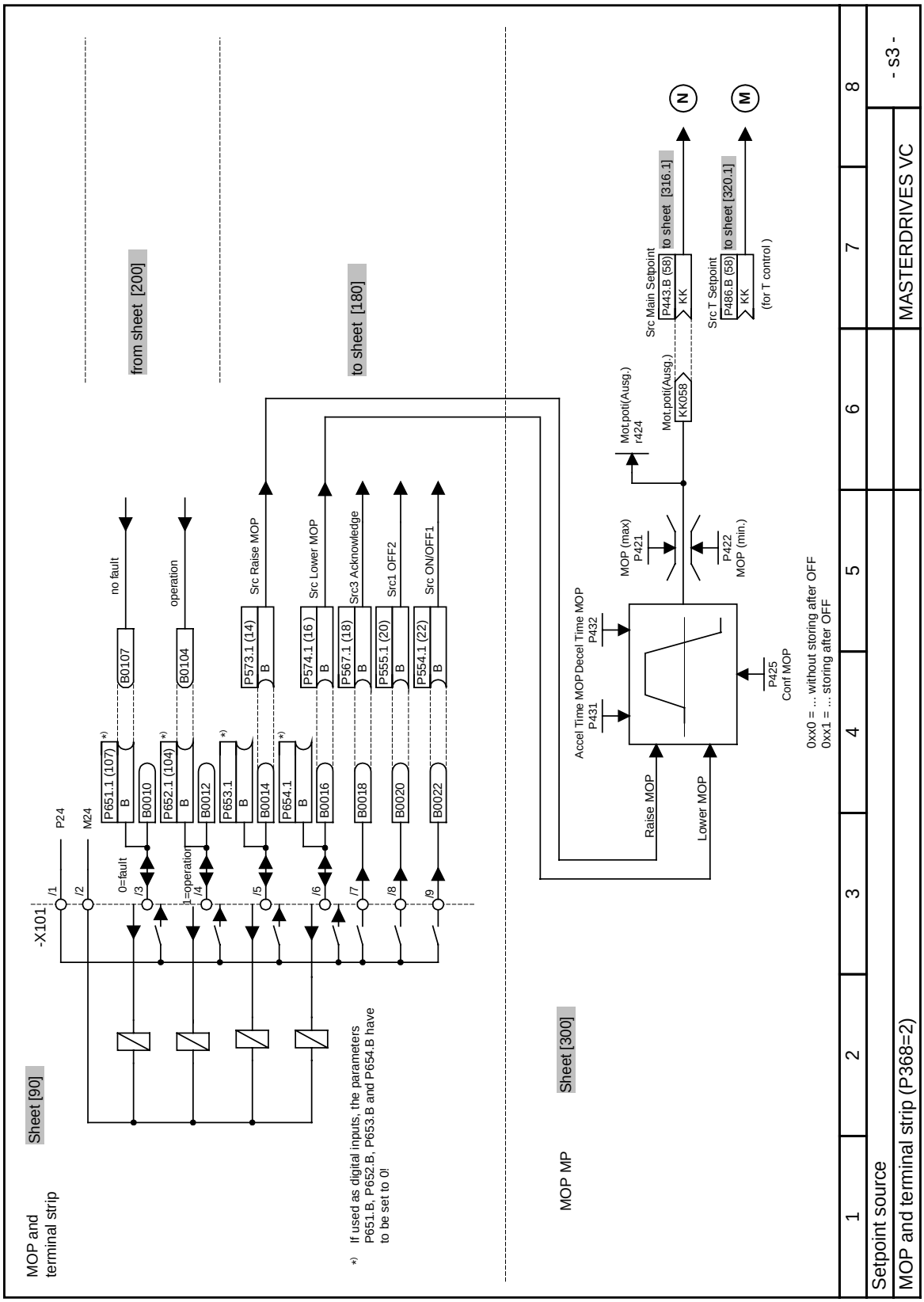
MOP and terminal strip
Sheet [90]
from sheet [200]
to sheet [180]
Sheet [300]
MOP MP
-X101
P24
M24
/1
/2
/3
/4
/5
/6
/7
/8
/9
0=fault
1=operation
no fault
operation
B0107
B0104
P651.1 (107)
P652.1 (104)
P653.1
P654.1
B0010
B0012
B0014
B0016
B0018
B0020
B0022
Src Raise MOP
Src Lower MOP
Src3 Acknowledge
Src1 OFF2
Src ON/OFF1
P573.1 (14)
P574.1 (16)
P567.1 (18)
P555.1 (20)
P554.1 (22)
*) If used as digital inputs, the parameters P651.B, P652.B, P653.B and P654.B have to be set to 0!
Accel Time MOP P431
Decel Time MOP P432
Raise MOP
Lower MOP
MOP (max) P421
P422 MOP (min.)
P425 Conf MOP
Mot.poti(Ausg.) r424
Mot.poti(Ausg.) KK058
Src Main Setpoint
P443.B (58) KK
to sheet [316.1]
Src T Setpoint
P486.B (58) KK
to sheet [320.1]
(for T control)
N
M
0xx0 = ... without storing after OFF
0xx1 = ... storing after OFF
1 2 3 4 5 6 7 8
Setpoint source
MOP and terminal strip (P368=2)
MASTERDRIVES VC
- s3 -

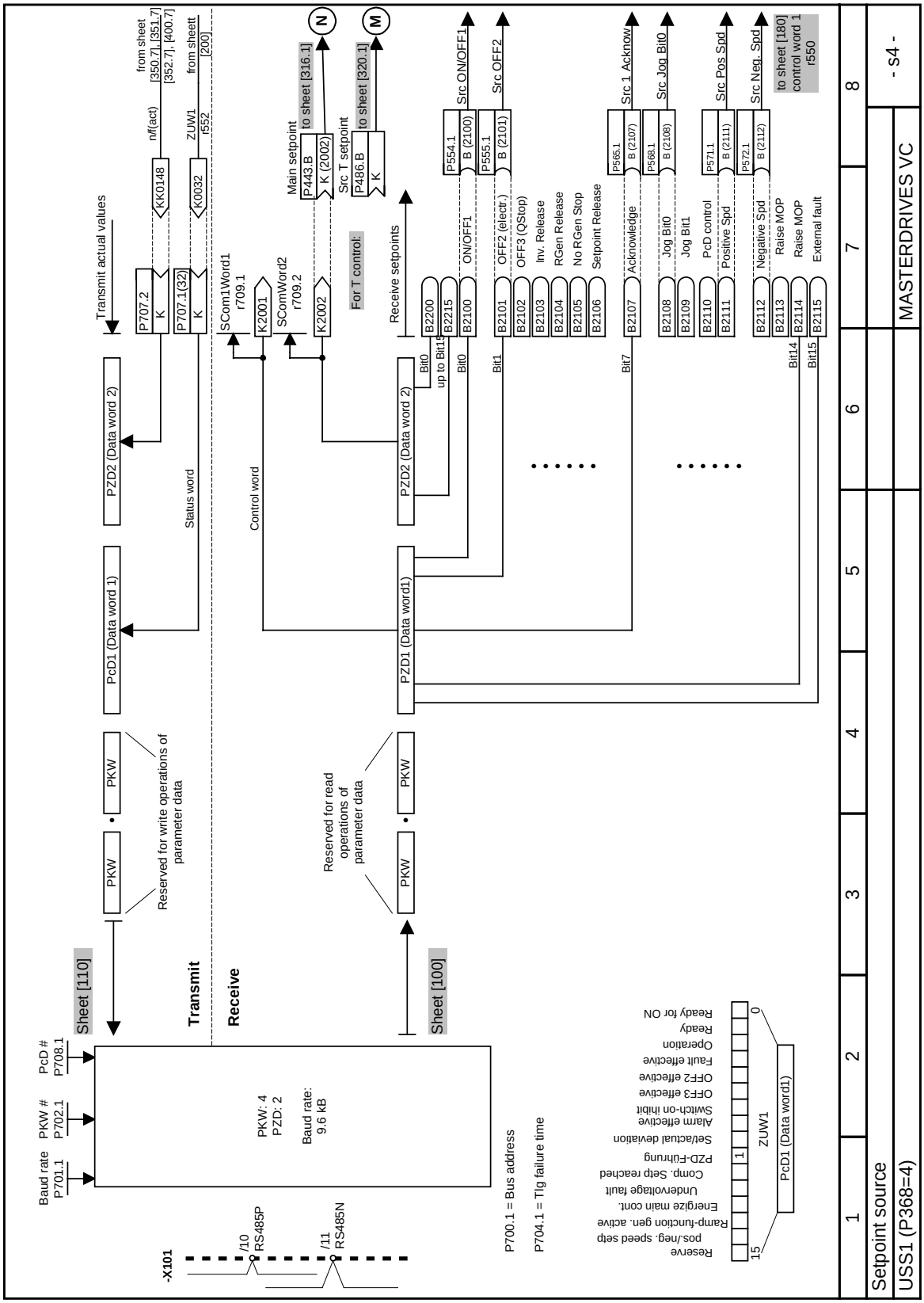
Setpoint source
USS1 (P368=4)
MASTERDRIVES VC
- s4 -
Transmit actual values
from sheet [350.7], [351.7] [352.7], [400.7]
from sheet [200]
nf(act)
ZUW1 r552
KK0148
K0032
P707.2
P707.1(32)
SCom1Word1 r709.1
SCom2Word2 r709.2
K2001
K2002
Main setpoint
Src T setpoint
P443.B
P486.B
K (2002)
to sheet [316.1]
to sheet [320.1]
For T control:
Receive setpoints
PZD2 (Data word 2)
PcD1 (Data word 1)
PZD1 (Data word1)
Status word
Control word
B2200
B2215
B2100
B2101
B2102
B2103
B2104
B2105
B2106
B2107
B2108
B2109
B2110
B2111
B2112
B2113
B2114
B2115
Bit0
up to Bit15
Bit1
Bit7
Bit14
Bit15
P554.1
P555.1
P565.1
P568.1
P571.1
P572.1
B (2100)
B (2101)
B (2107)
B (2108)
B (2111)
B (2112)
Src ON/OFF1
Src OFF2
Src 1 Acknow
Src Jog Bit0
Src Pos Spd
Src Neg. Spd
ON/OFF1
OFF2 (electr.)
OFF3 (QStop)
Inv. Release
RGen Release
No RGen Stop
Setpoint Release
Acknowledge
Jog Bit0
Jog Bit1
PcD control
Positive Spd
Negative Spd
Raise MOP
External fault
to sheet [180] control word 1 r550
PKW
Reserved for write operations of parameter data
Reserved for read operations of parameter data
Transmit
Receive
Sheet [110]
Sheet [100]
Baud rate P701.1
PKW # P702.1
PcD # P708.1
PKW: 4
PZD: 2
Baud rate: 9.6 kB
-X101
/10 RS485P
/11 RS485N
P700.1 = Bus address
P704.1 = Tlg failure time
ZUW1
PcD1 (Data word1)
Reserve
pos./neg. speed setp
Ramp-function gen. active
Energize main cont.
Undervoltage fault
Comp. Setp reached
PZD-Führung
Setactual deviation
Alarm effective
Switch-on inhibit
OFF3 effective
OFF2 effective
Fault effective
Operation
Ready
Ready for ON
15
1
0

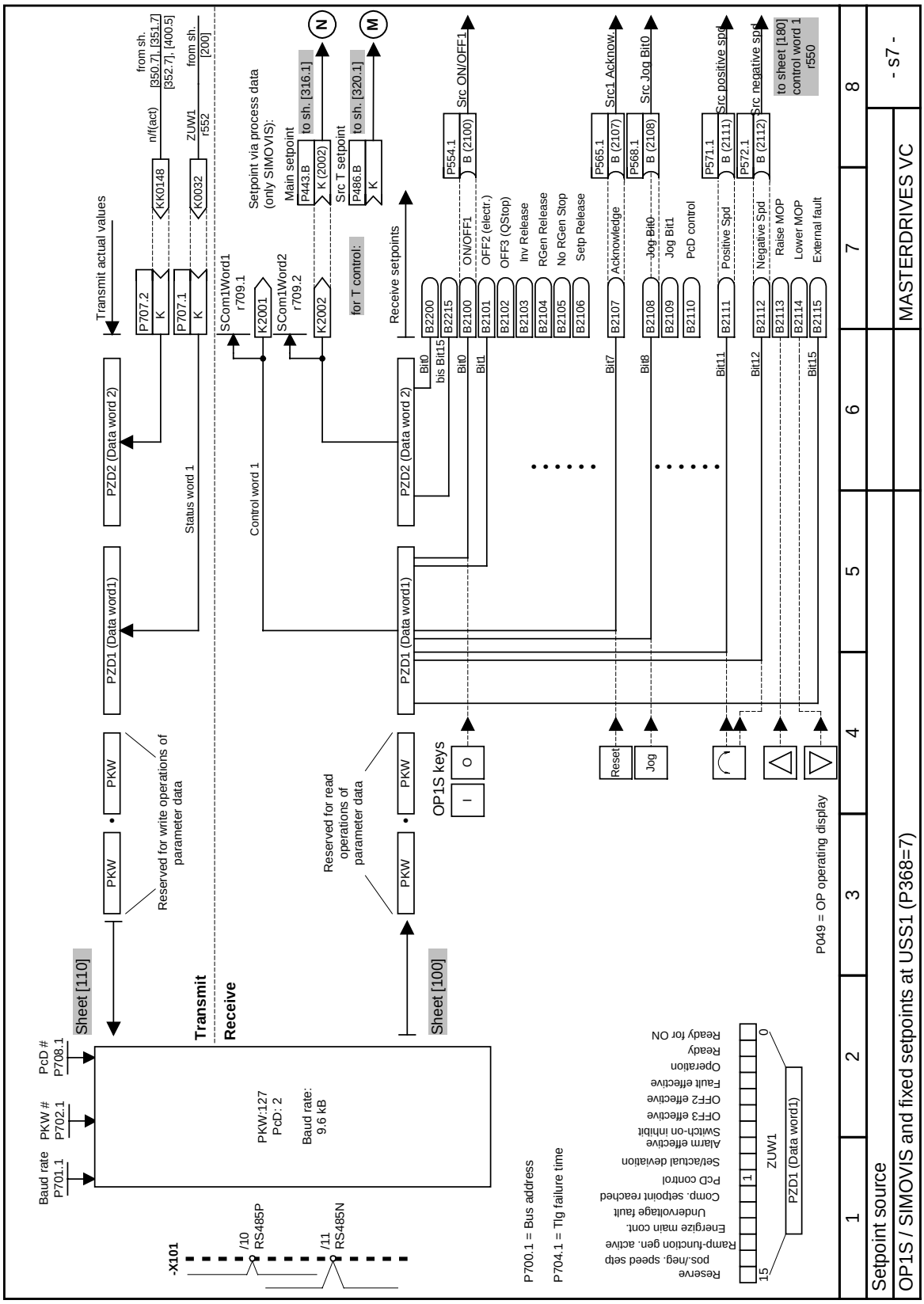
OP1S / SIMOVIS and fixed setpoints at USS1 (P368=7)
Setpoint source
MASTERDRIVES VC
- s7 -
Transmit actual values
PZD2 (Data word 2)
PZD1 (Data word1)
Status word 1
Control word 1
Transmit
Receive
Receive setpoints
Setpoint via process data (only SIMOVIS):
Main setpoint
Src T setpoint
for T control:
to sh. [316.1]
to sh. [320.1]
from sh. [350.7], [351.7], [352.7], [400.5]
from sh. [200]
to sheet [180] control word 1 r550
Sheet [110]
Sheet [100]
Reserved for write operations of parameter data
Reserved for read operations of parameter data
PKW
OP1S keys
P049 = OP operating display
Baud rate P701.1
PKW # P702.1
PcD # P708.1
PKW:127
PcD: 2
Baud rate: 9.6 kB
-X101
/10 RS485P
/11 RS485N
P700.1 = Bus address
P704.1 = Tlg failure time
ZUW1
PZD1 (Data word1)
Reserve
pos./neg. speed setp
Ramp-function gen. active
Energize main cont.
Undervoltage fault
Comp. setpoint reached
PcD control
Setp/actual deviation
Alarm effective
Switch-on inhibit
OFF3 effective
OFF2 effective
Fault effective
Operation
Ready
Ready for ON
ON/OFF1
OFF2 (electr.)
OFF3 (QStop)
Inv Release
RGen Release
No RGen Stop
Setp Release
Acknowledge
Jog Bit0
Jog Bit1
PcD control
Positive Spd
Negative Spd
Raise MOP
Lower MOP
External fault
Src ON/OFF1
Src1 Acknow.
Src Jog Bit0
Src positive spd
Src negative spd
Reset
Jog

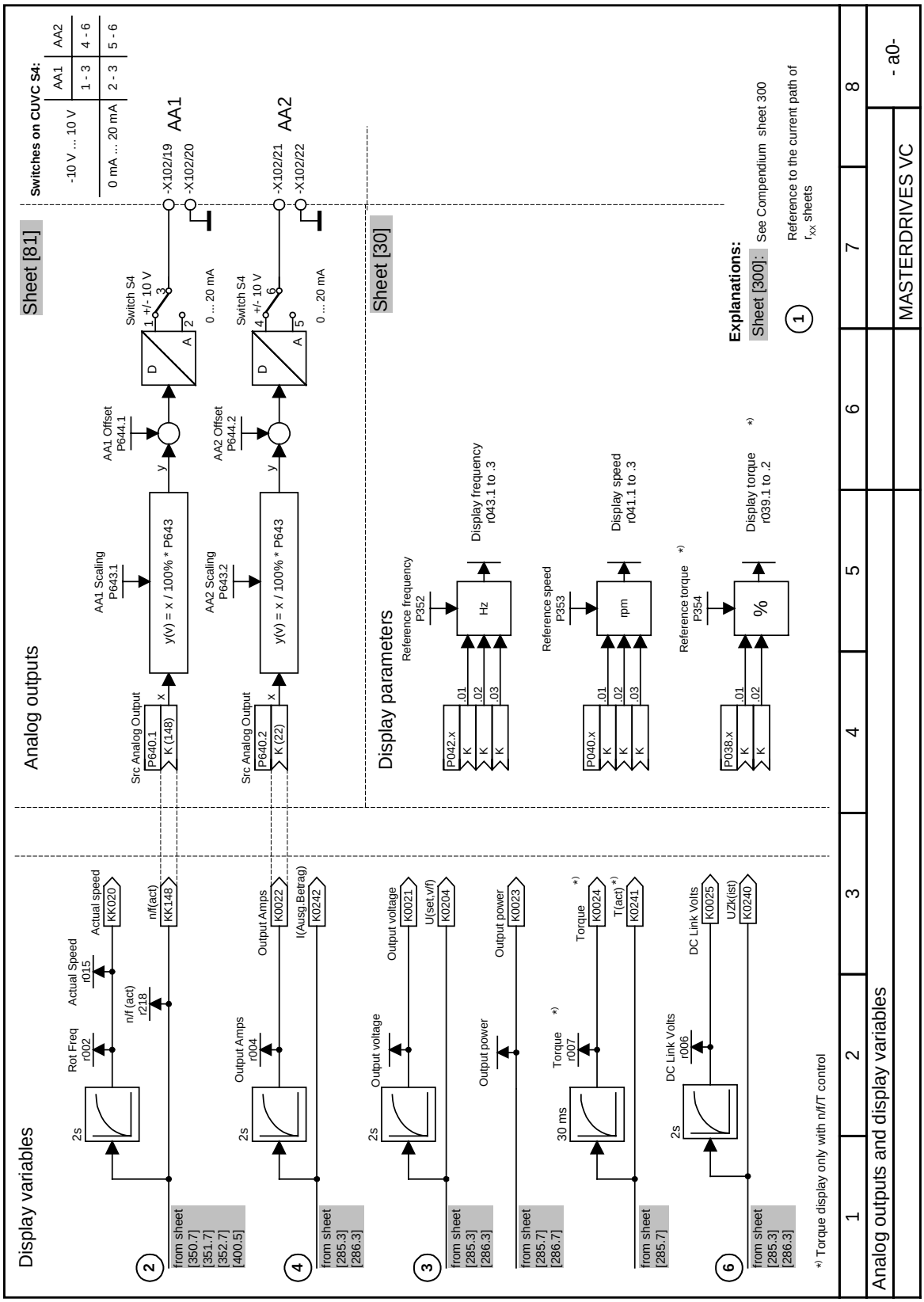
Display variables
Analog outputs
Sheet [81]
Sheet [30]
Display parameters
Switches on CUVC S4:
-10 V ... 10 V
0 mA ... 20 mA
AA1
AA2
Switch S4
+/- 10 V
0 ... 20 mA
AA1 Offset P644.1
AA2 Offset P644.2
AA1 Scaling P643.1
AA2 Scaling P643.2
y(V) = x / 100% * P643
Src Analog Output
P640.1
K (148)
P640.2
K (22)
-X102/19
-X102/20
-X102/21
-X102/22
Rot Freq r002
Actual Speed r015
Actual speed KK020
n/f (act) r218
n/f(act) KK148
Output Amps r004
Output Amps K0022
I(Ausg.Betrag) K0242
Output voltage
Output voltage K0021
U(set,vf) K0204
Output power
Output power K0023
Torque r007
Torque K0024
T(act) K0241
DC Link Volts r006
DC Link Volts K0025
UZk(ist) K0240
2s
30 ms
from sheet [350.7] [351.7] [352.7] [400.5]
from sheet [285.3] [286.3]
from sheet [285.7]
Reference frequency P352
Reference speed P353
Reference torque P354
Display frequency r043.1 to .3
Display speed r041.1 to .3
Display torque r039.1 to .2
Hz
rpm
%
P042.x
P040.x
P038.x
Explanations:
Sheet [300]: See Compendium sheet 300
Reference to the current path of rXX sheets
*) Torque display only with n/f/T control
Analog outputs and display variables
MASTERDRIVES VC
- a0-

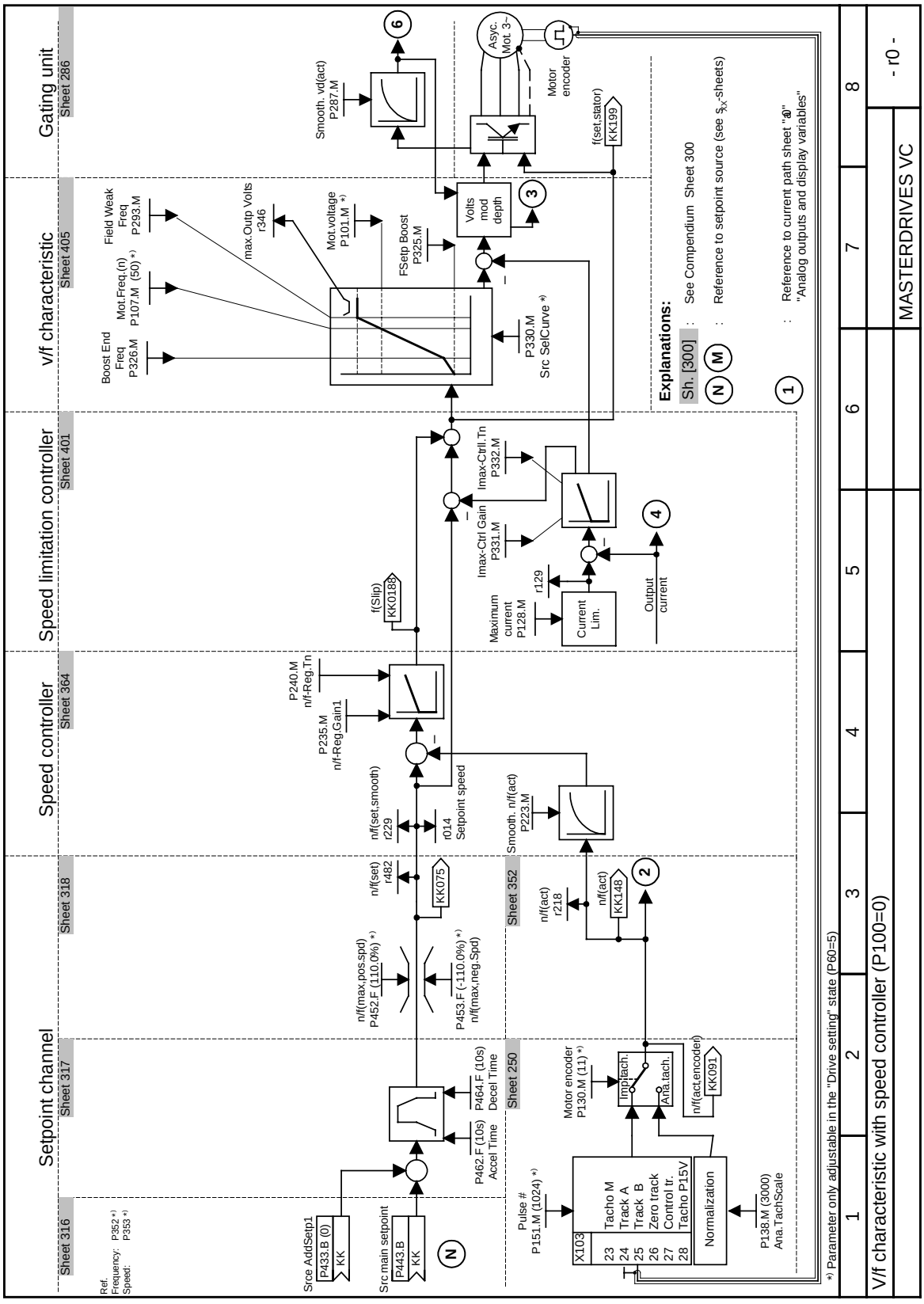
Setpoint channel
Speed controller
Speed limitation controller
v/f characteristic
Gating unit
Sheet 316
Sheet 317
Sheet 318
Sheet 364
Sheet 401
Sheet 405
Sheet 286
Sheet 250
Sheet 352
Ref. Frequency: P352 *)
Speed: P353 *)
Srce AddSetp1
P433.B (0)
KK
Src main setpoint
P443.B
KK
N
P462.F (10s) Accel Time
P464.F (10s) Decel Time
Pulse # P151.M (1024) *)
X103
23 Tacho M
24 Track A
25 Track B
26 Zero track
27 Control tr.
28 Tacho P15V
Normalization
P138.M (3000) Ana.TachScale
Motor encoder P130.M (11) *)
Impl.tach.
Ana.tach.
n/f(act,encoder)
KK091
n/f(max.pos.spd) P452.F (110.0%) *)
n/f(max.neg.Spd) P453.F (-110.0%) *)
n/f(set) r482
KK075
n/f(set.smooth) r229
n014 Setpoint speed
P240.M n/f-Reg.Tn
P235.M n/f-Reg.Gain1
n/f(act) r218
n/f(act) KK148
Smooth. n/f(act) P223.M
f(Slip) KK0188
Imax-Ctrl.Tn P332.M
Imax-Ctrl Gain P331.M
Maximum current P128.M
r129
Current Lim.
Output current
Boost End Freq P326.M
Mot.Freq.(ri) P107.M (50) *)
Field Weak Freq P293.M
max.Outp Volts r346
Mot.voltage P101.M *)
FSetp Boost P325.M
P330.M Src SelCurve *)
Volts mod depth
Smooth. vd(act) P287.M
Asyc. Mot 3~
Motor encoder
f(set.stator) KK199
Explanations:
Sh. [300] : See Compendium Sheet 300
N M : Reference to setpoint source (see $x-sheets)
1 : Reference to current path sheet "a" "Analog outputs and display variables"
*) Parameter only adjustable in the "Drive setting" state (P60=5)
V/f characteristic with speed controller (P100=0)
MASTERDRIVES VC
- r0 -

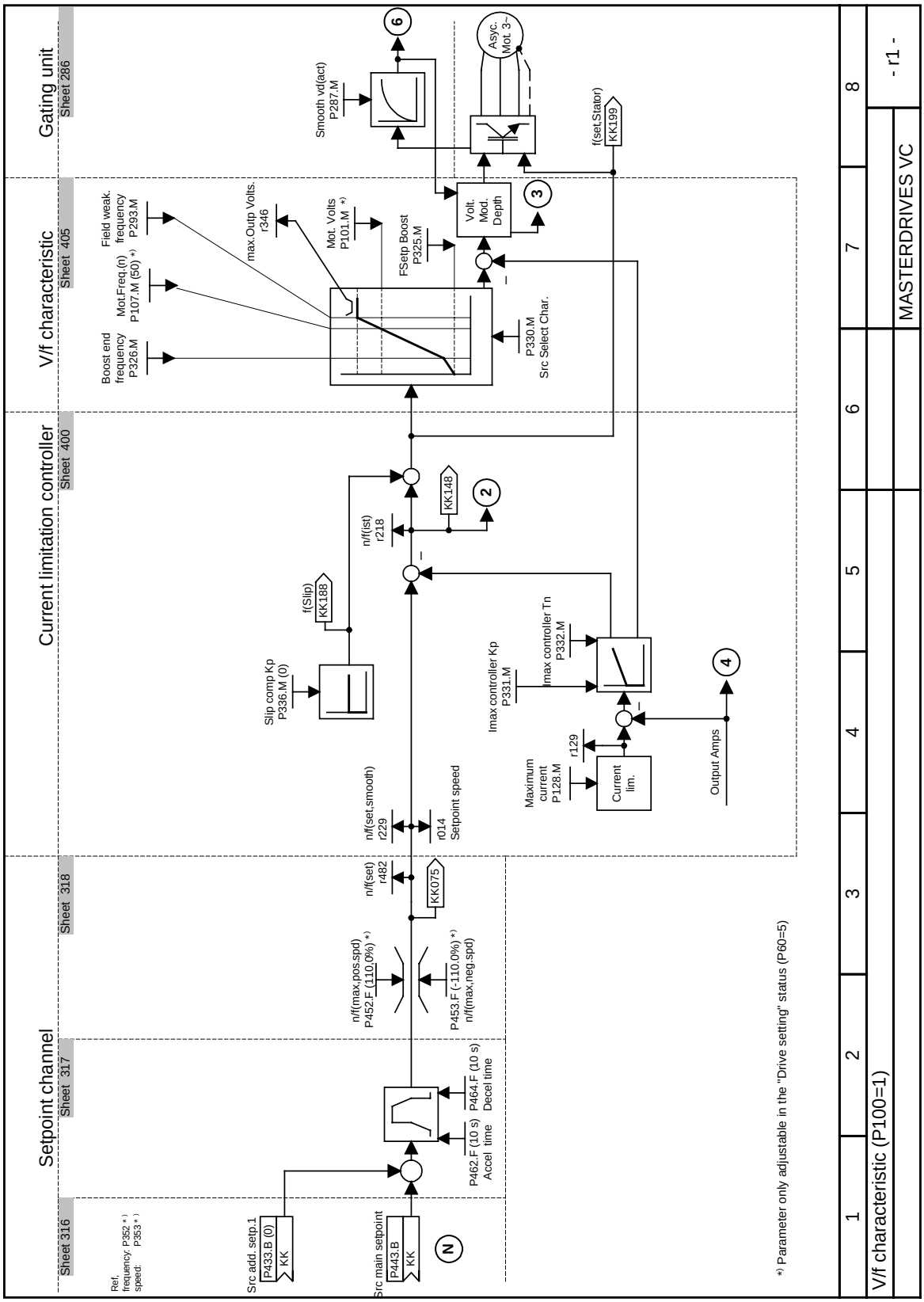
Setpoint channel
Sheet 316
Sheet 317
Sheet 318
Current limitation controller
Sheet 400
V/f characteristic
Sheet 405
Gating unit
Sheet 286
Ref. frequency: P352 *)
speed: P353 *)
Src add. setp.1
P433.B (0)
KK
Src main setpoint
P443.B
KK
N
P462.F (10 s)
Accel time
P464.F (10 s)
Decel time
n/f(max.pos.spd)
P452.F (110.0%) *)
P453.F (-110.0%) *)
n/f(max.neg.spd)
n/f(set)
r482
KK075
n/f(set.smooth)
r229
n014
Setpoint speed
Slip comp Kp
P336.M (0)
f(Slip)
KK188
n/f(ist)
r218
KK148
2
Imax controller Kp
P331.M
Imax controller Tn
P332.M
Maximum current
P128.M
r129
Current lim.
Output Amps
4
Boost end frequency
P326.M
Mot.Freq.(n)
P107.M (50) *)
Field weak. frequency
P293.M
max.Outp Volts.
r346
Mot. Volts
P101.M *)
FSetp Boost
P325.M
P330.M
Src Select Char.
Volt. Mod. Depth
3
Smooth vd(act)
P287.M
6
Asyc. Mot. 3~
f(set.Stator)
KK199
*) Parameter only adjustable in the "Drive setting" status (P60=5)
1
2
3
4
5
6
7
8
V/f characteristic (P100=1)
MASTERDRIVES VC
- r1 -

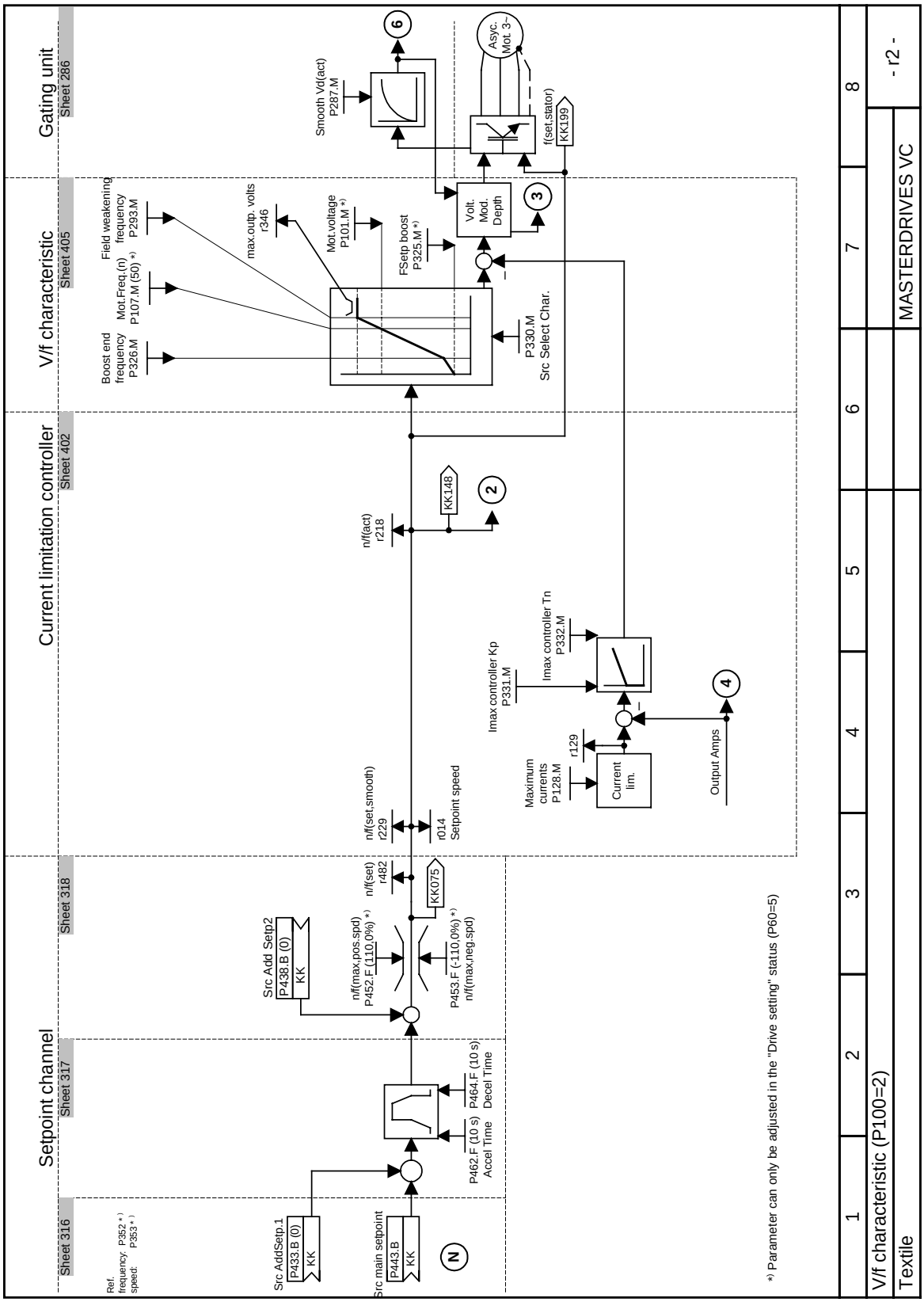
Setpoint channel
Sheet 316
Sheet 317
Sheet 318
Current limitation controller
Sheet 402
V/f characteristic
Sheet 405
Gating unit
Sheet 286
Ref. frequency: P352 *)
speed: P353 *)
Src AddSetp.1
P433.B (0)
KK
Src main setpoint
P443.B
KK
N
P462.F (10 s)
Accel Time
P464.F (10 s)
Decel Time
Src Add Setp2
P438.B (0)
KK
n/f(max.pos.spd)
P452.F (110.0%) *)
n/f(max.neg.spd)
P453.F (-110.0%) *)
KK075
n/f(set)
r482
n/f(set.smooth)
r229
r014
Setpoint speed
n/f(act)
r218
KK148
2
Imax controller Kp
P331.M
Imax controller Tn
P332.M
Maximum currents
P128.M
r129
Current lim.
Output Amps
4
Boost end frequency
P326.M
Mot.Freq.(n) P107.M (50) *)
Field weakening frequency
P293.M
max.outp. volts
r346
Mot.voltage
P101.M *)
FSetp boost
P325.M *)
P330.M
Src Select Char.
Volt. Mod. Depth
3
Smooth Vd(act)
P287.M
6
Asyc. Mot. 3~
f(set.stator)
KK199
*) Parameter can only be adjusted in the "Drive setting" status (P60=5)
1 2 3 4 5 6 7 8
V/f characteristic (P100=2)
Textile
MASTERDRIVES VC
- r2 -

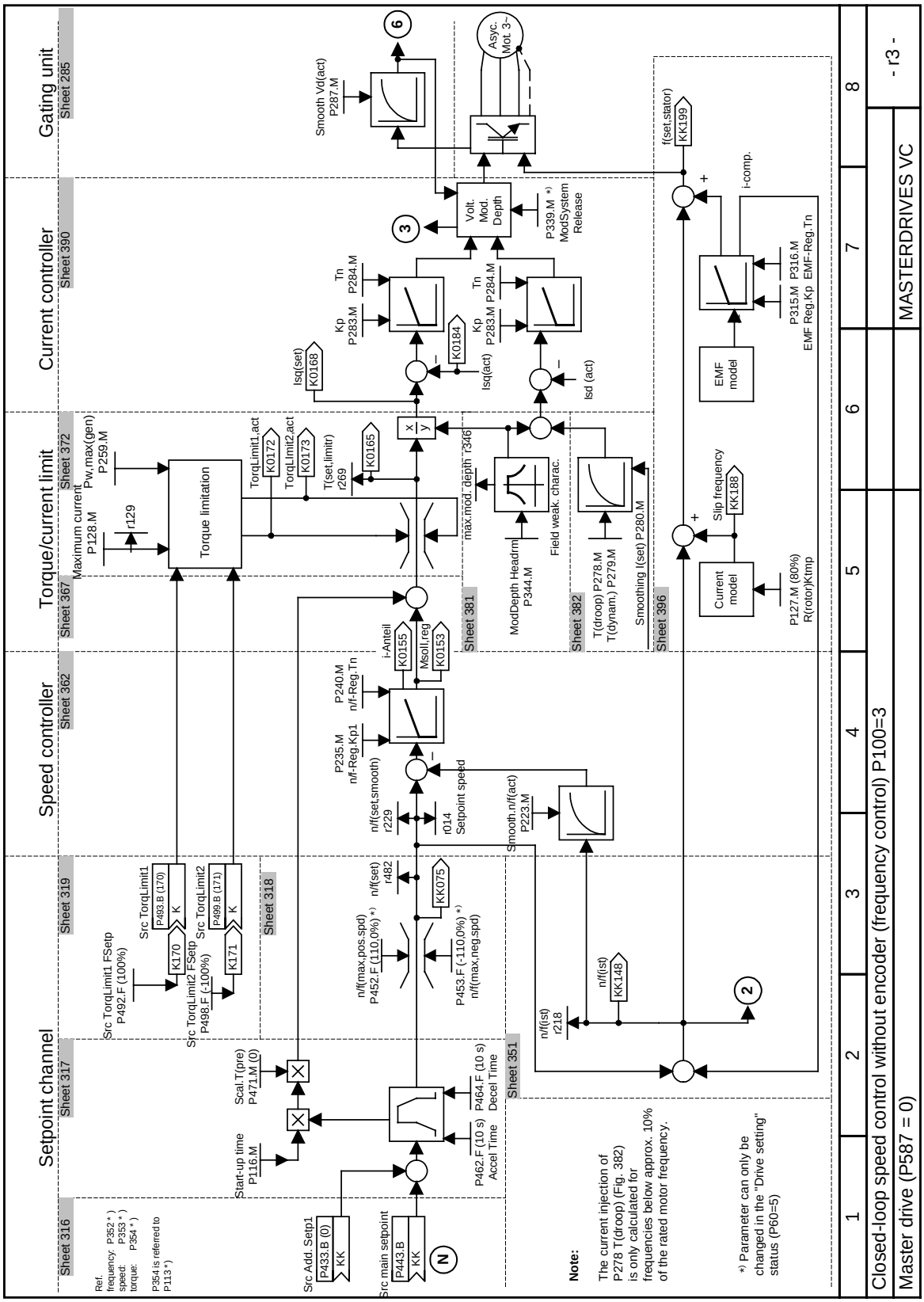
Setpoint channel
Speed controller
Torque/current limit
Current controller
Gating unit
Sheet 316
Sheet 317
Sheet 318
Sheet 319
Sheet 362
Sheet 367
Sheet 372
Sheet 381
Sheet 382
Sheet 390
Sheet 396
Sheet 285
Ref. frequency: P352 *) speed: P353 *) torque: P354 *)
P354 is referred to P113 *)
Src Add. Setp1 P433.B (0) KK
Src main setpoint P443.B KK
Start-up time P116.M
Scal.T(pre) P471.M (0)
P462.F (10 s) Accel Time
P464.F (10 s) Decel Time
Src TorqLimit1 FSetp P492.F (100%)
Src TorqLimit2 FSetp P498.F (-100%)
Src TorqLimit1 P483.B (170) K
Src TorqLimit2 P499.B (171) K
K170
K171
n/f(max.pos.spd) P452.F (110.0%) *)
P453.F (-110.0%) *) n/f(max.neg.spd)
n/f(set) r482
KK075
n/f(ist) r218
n/f(ist) KK148
Smooth.n/f(act) P223.M
n/f(set,smooth) r229
r014 Setpoint speed
P235.M n/f-Reg.Kp1
P240.M n/f-Reg.Tn
i-Anteil K0155
Msoll.reg K0153
Maximum current P128.M
r129
Pw.max(gen) P259.M
Torque limitation
TorqLimit1.act K0172
TorqLimit2.act K0173
T(set,limitr) r269 K0165
max.mod. depth r346
ModDepth Headrm P344.M
Field weak. charac.
T(droop) P278.M
T(dynam.) P279.M
Smoothing I(set) P280.M
Isq(set) K0168
Isq(act) K0184
Isd (act)
Kp P283.M
Tn P284.M
Volt. Mod. Depth
P339.M *) ModSystem Release
Smooth Vd(act) P287.M
Async. Mot. 3~
f(set.stator) KK199
i-comp.
EMF model
P315.M EMF Reg.Kp
P316.M EMF-Reg.Tn
Slip frequency KK188
Current model
P127.M (80%) R(rotor)Ktmp
Note:
The current injection of P278 T(droop) (Fig. 382) is only calculated for frequencies below approx. 10% of the rated motor frequency.
*) Parameter can only be changed in the "Drive setting" status (P60=5)
1 2 3 4 5 6 7 8
Closed-loop speed control without encoder (frequency control) P100=3
Master drive (P587 = 0)
MASTERDRIVES VC
- r3 -

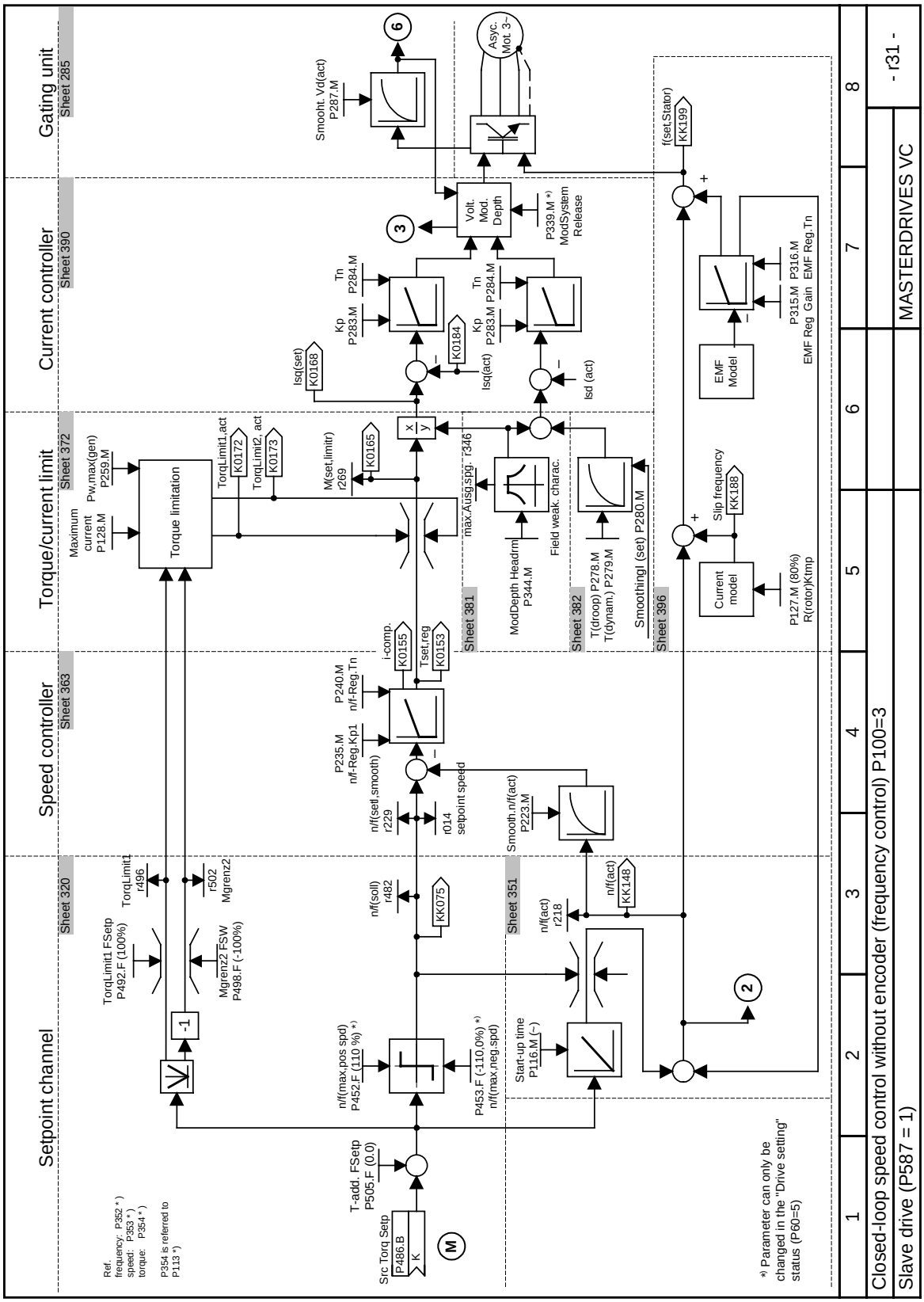
Setpoint channel
Speed controller
Torque/current limit
Current controller
Gating unit
Sheet 320
Sheet 363
Sheet 372
Sheet 390
Sheet 285
Sheet 351
Sheet 381
Sheet 382
Sheet 396
Torque limitation
Volt. Mod. Depth
Current model
EMF Model
Asyc. Mot. 3~
Src Torq Setp
P486.B
T-add. FSetp
P505.F (0.0)
n/f(max,pos spd)
P452.F (110 %) *)
P453.F (-110,0%) *)
n/f(max,neg.spd)
Start-up time
P116.M (~)
n/f(act)
r218
n/f(act)
KK148
n/f(soll)
r482
KK075
n/f(setl,smooth)
r229
r014
setpoint speed
Smooth.n/f(act)
P223.M
P235.M
n/f-Reg.Kp1
P240.M
n/f-Reg.Tn
i-comp.
K0155
Tset,reg
K0153
Maximum current
P128.M
Pw,max(gen)
P259.M
TorqLimit1,act
K0172
TorqLimit2, act
K0173
M(set,limitr)
r269
K0165
max.Ausg.spg. r346
ModDepth Headrm
P344.M
Field weak. charac.
T(droop) P278.M
T(dynam.) P279.M
Smoothingl (set) P280.M
Isq(set)
K0168
Kp
P283.M
Tn
P284.M
K0184
Isq(act)
Isd (act)
P339.M *)
ModSystem Release
Smooht. Vd(act)
P287.M
f(set,Stator)
KK199
Slip frequency
KK188
P127.M (80%)
R(rotor)Ktmp
P315.M
EMF Reg Gain
P316.M
EMF Reg.Tn
TorqLimit1 FSetp
P492.F (100%)
Mgrenz2 FSW
P498.F (-100%)
TorqLimit1
r496
r502
Mgrenz2
Ref.
frequency: P352 *)
speed: P353 *)
torque: P354 *)
P354 is referred to P113 *)
*) Parameter can only be changed in the "Drive setting" status (P60=5)
1
2
3
4
5
6
7
8
Closed-loop speed control without encoder (frequency control) P100=3
Slave drive (P587 = 1)
MASTERDRIVES VC
- r31 -

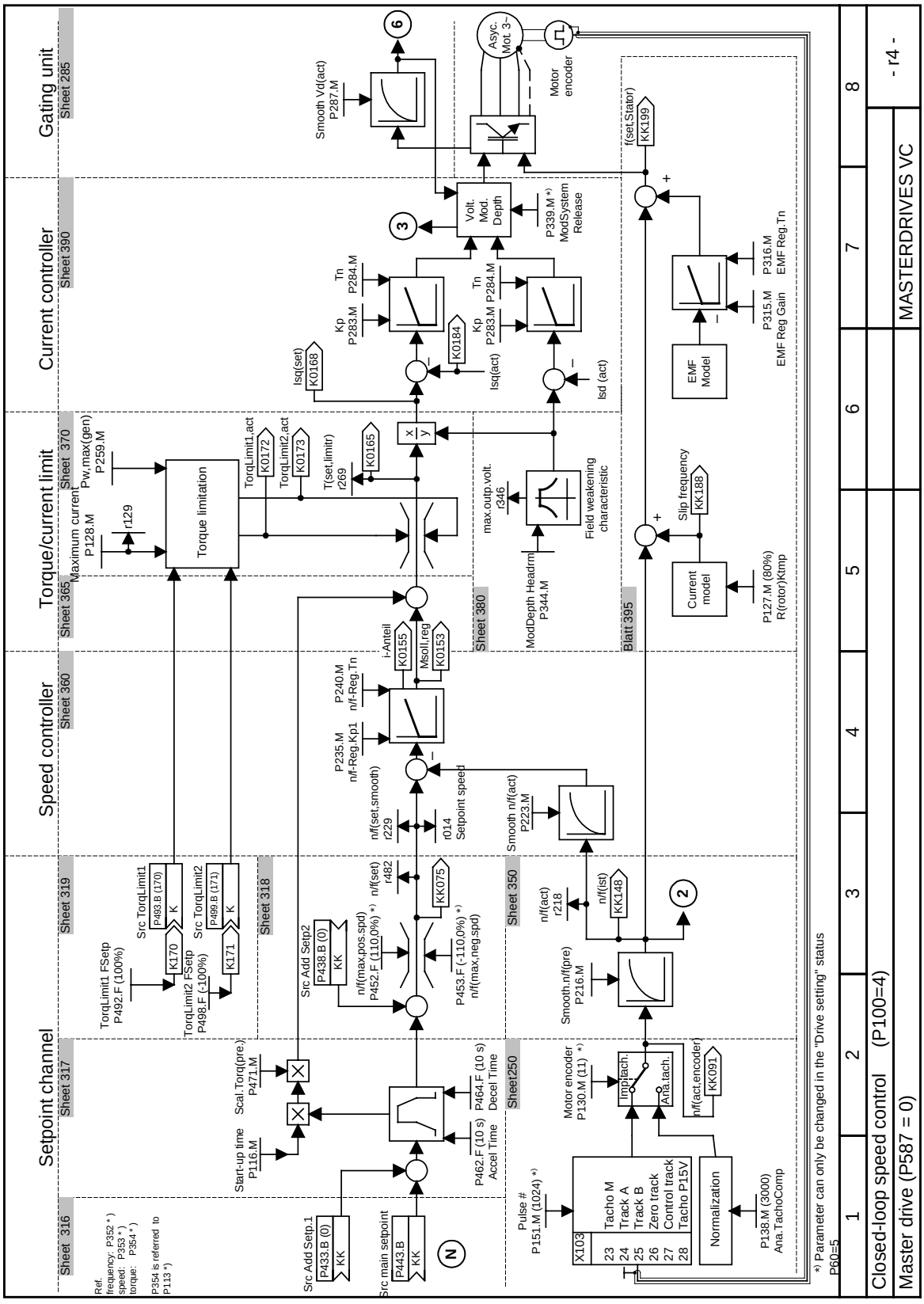
Setpoint channel
Speed controller
Torque/current limit
Current controller
Gating unit
Sheet 316
Sheet 317
Sheet 319
Sheet 318
Sheet 360
Sheet 365
Sheet 370
Sheet 380
Sheet 390
Sheet 285
Sheet 350
Sheet250
Blatt 395
Ref. frequency: P352 *) speed: P353 *) torque: P354 *)
P354 is referred to P113 *)
Src Add Setp.1 P433.B (0) KK
Src main setpoint P443.B KK
Start-up time P116.M
Scal.Torq(pre.) P471.M
P462.F (10 s) Accel Time
P464.F (10 s) Decel Time
Pulse # P151.M (1024) *)
X103
23 Tacho M
24 Track A
25 Track B
26 Zero track
27 Control track
28 Tacho P15V
Normalization
P138.M (3000) Ana.TachoComp
Motor encoder P130.M (11) *)
Impl.tach.
Ana.tach.
n/f(act,encoder) KK091
Smooth.n/f(pre) P216.M
n/f(act) r218
n/f(ist) KK148
Smooth n/f(act) P223.M
Src TorqLimit1 P493.B (170) K
Src TorqLimit2 P499.B (171) K
TorqLimit1 FSetp P492.F (100%)
TorqLimit2 FSetp P498.F (-100%)
K170
K171
Src Add Setp2 P438.B (0) KK
n/f(max.pos.spd) P452.F (110.0%) *)
P453.F (-110.0%) *) n/f(max.neg.spd)
n/f(set) r482
KK075
n/f(set.smooth) r229
P235.M n/f-Reg.Kp1
P240.M n/f-Reg.Tn
i-Anteil K0155
Msoll.reg K0153
n014 Setpoint speed
Maximum current P128.M
r129
Pw,max(gen) P259.M
Torque limitation
TorqLimit1.act K0172
TorqLimit2.act K0173
T(set,limitr) r269
K0165
max.outp.volt. r346
ModDepth Headrm P344.M
Field weakening characteristic
Slip frequency KK188
Current model
P127.M (80%) R(rotor)Ktmp
f(set,Stator) KK199
EMF Model
P315.M EMF Reg Gain
P316.M EMF Reg.Tn
Isd(set) K0168
Isq(act)
K0184
Isd (act)
Kp P283.M
Tn P284.M
Volt. Mod. Depth
P339.M *) ModSystem Release
Smooth Vd(act) P287.M
Asyc. Mot 3~
Motor encoder
*) Parameter can only be changed in the "Drive setting" status
P60=5
1 2 3 4 5 6 7 8
Closed-loop speed control (P100=4)
Master drive (P587 = 0)
MASTERDRIVES VC
- r4 -

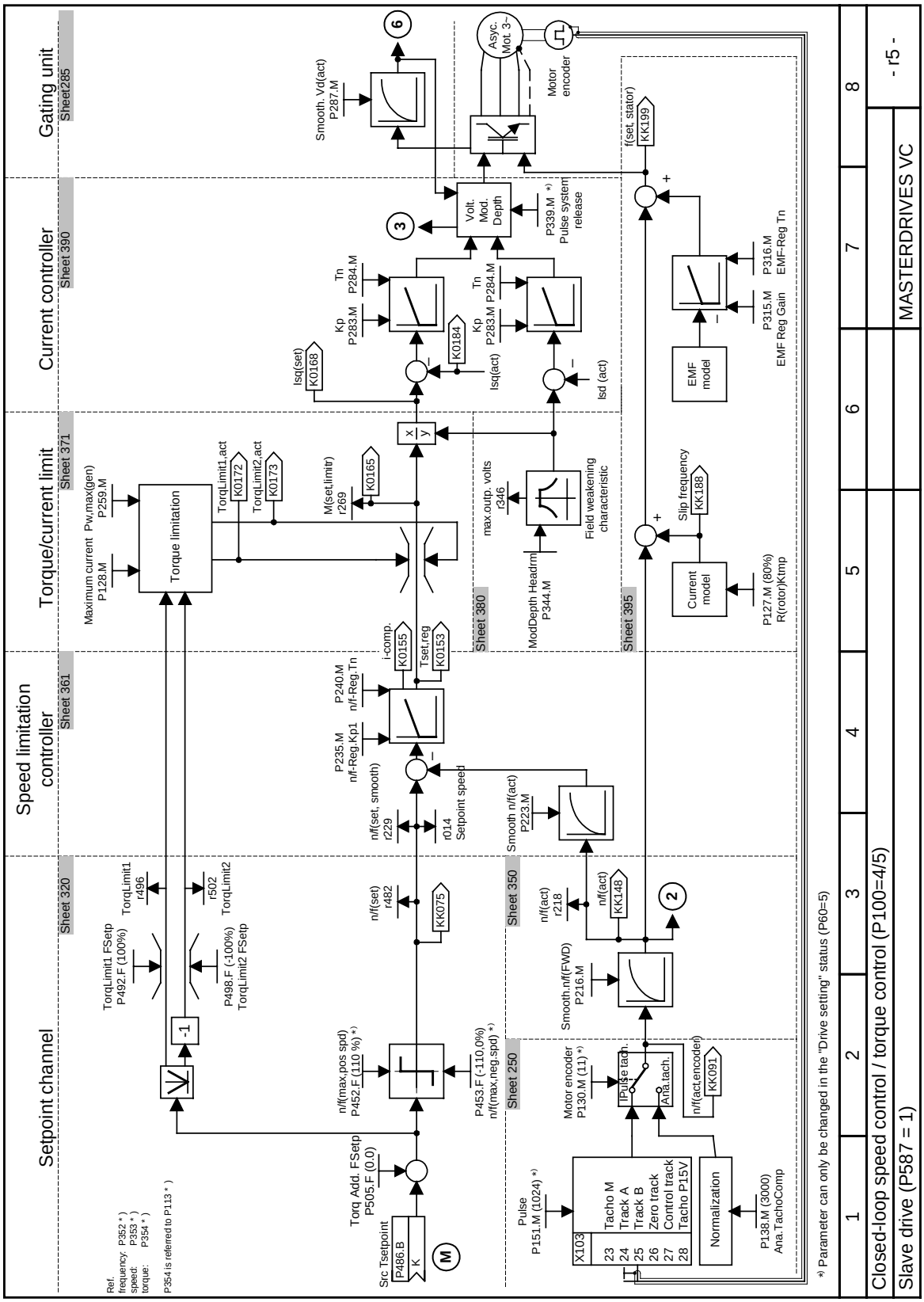
Setpoint channel
Speed limitation controller
Torque/current limit
Current controller
Gating unit
Sheet 320
Sheet 361
Sheet 371
Sheet 390
Sheet285
Sheet 250
Sheet 350
Sheet 380
Sheet 395
Torque limitation
Field weakening characteristic
Current model
EMF model
Normalization
Volt. Mod. Depth
Asyc. Mot. 3~
Motor encoder
Pulse system release
Pulse
Tacho M
Track A
Track B
Zero track
Control track
Tacho P15V
Ref.
frequency: P352 *)
speed: P353 *)
torque: P354 *)
P354 is referred to P113 *)
*) Parameter can only be changed in the "Drive setting" status (P60=5)
Closed-loop speed control / torque control (P100=4/5)
Slave drive (P587 = 1)
MASTERDRIVES VC
- r5 -

Parameter assignments depending on setpoint source (P368) and control type (P100):

Parameter description		P368 = Setpoint source					
		P368 = 0 PMU + MOP	**P368 = 1 Analog inp. + terminals**	**P368 = 2 FSetp + terminals**	**P368 = 3 MOP + terminals**	**P368 = 4 USS**	**P368 = 7 OP1S + FSetp**
P554.1	Src ON/OFF1	B0005	B0022	B0022	B0022	B2100	B2100
P555.1	Src OFF2	1	B0020	B0020	B0020	B2101	1
P561.1	Src InvRelease	1	B0016	1	1	1	1
P565.1	Src1 Fault Reset	B2107	B2107	B2107	B2107	B2107	B2107
P567.1	Src3 Fault Reset	0	B0018	B0018	B0018	0	0
P568.1	Src Jog Bit0	0	0	0	0	B2108	B2108
P571.1	Src FWD Speed	1	1	1	1	B2111	B2111
P572.1	Src REV Speed	1	1	1	1	B2112	B2112
P573.1	Src MOP Up	B0008	0	0	B0014	0	0
P574.1	Src MOP Down	B0009	0	0	B0016	0	0
P580.1	Src FixSetp Bit0	0	0	B0014	0	0	0
P581.1	Src FixSetp Bit1	0	0	B0016	0	0	0
P590	Src BICO DSet	0	0	0	0	0	0
P651.1	Src DigOut1	B0107	B0107	B0107	B0107	B0107	B0107
P652.1	Src DigOut2	B0104	B0104	B0104	B0104	B0104	B0104
P653.1	Src DigOut3	0	B0115	0	0	0	0
P654.1	Src DigOut4	0	0	0	0	0	0
Setpoint conn. parameter		KK0058	K0011	KK0040	KK0058	K2002	KK0040

v/f characteristic + n/f-control: Setpoint connector parameter (Setp-KP) = P443

T-control + n/f control: Setpoint connector parameter (Setp-KP) = P486

Parameter description		P100 = control type					
		P100 = 0 V/f + n	**P100 = 1 V/f**	**P100 = 2 Textile**	**f-Reg. (P587 = 0)**	**n-Reg. (P587 = 0)**	**P100 = 5 T-Reg.**
P038.1	DispTorqConn.r39.1	-	-	-	-	-	Sw-KP
P038.1	DispTorqConn.r39.2	-	-	-	-	-	K0165
P040.1	DispSpdConn.r41.1	Setp CP	Setp CP	Setp CP	Setp CP	Setp CP	KK0150
P040.2	DispSpdConn.r41.2	KK0148	KK0148	KK0148	KK0148	KK0148	KK0148
P040.3	Disp Freq Conn.r41.3	-	-	-	KK0091	KK0091	KK0091
P042.1	Disp Freq Conn.r43.1	Setp CP	Setp CP	Setp CP	Setp CP	Setp CP	KK0150
P042.2	Disp Freq Conn.r43.2	KK0148	KK0148	KK0148	KK0148	KK0148	KK0148
P042.3	Disp Freq Conn.r43.3	KK0199	KK0199	KK0199	KK0091	KK0091	KK0091

Bxxxx = Binector (Digital signal; values 0 and 1)
Kxxxx = Connector (16-bit signal; 4000h = 100 %)
KKxxxx = Double connector (32-bit signal; 4000 0000h = 100 %)

9.3 Detailed parameterization

Detailed parameterization should always be used in cases where the application conditions of the units are not exactly known beforehand and detailed parameter adjustments need to be carried out locally. An example of a typical application is initial start-up.

9.3.1 Power section definition

The power section definition has already been completed in the as-delivered state. It therefore only needs to be carried out if the CUVC needs replacing, and is not required under normal circumstances.

During the power section definition, the control electronics is informed which power section it is working with. This step is necessary for all Compact, chassis and cabinet type units.

WARNING

If CUVC boards are changed over between different units without the power section being re-defined, the unit can be destroyed when it is connected up to the voltage supply and energized.

The unit has to be switched to the "Power section definition" state for carrying out the power section definition. This is done by selecting the "Power section definition" menu. The power section is then defined in this menu by inputting a code number.

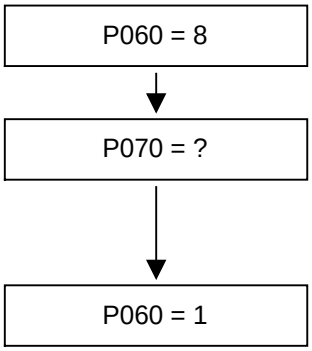

Select "Power section definition" menu

Input the code number for the unit concerned
The code number is allocated to the order numbers (MLFB).
The order number can be read off the unit's rating plate.
The list of units is on the following pages.

Return to parameter menu

Fig. 9-5 Sequence for performing the power section definition

NOTE

To check the input data, the values for the converter supply voltage in P071 and the converter current in P072 should be checked after returning to the parameter menu. They must tally with the data given on the unit rating plate.

DC 270 V to 310 V

Order number	In [A]	PWE
6SE7021-0RA60	10.6	15
6SE7021-3RA60	13.3	22
6SE7021-8RB60	17.7	28
6SE7022-3RB60	22.9	33
6SE7023-2RB60	32.2	40
6SE7024-4RC60	44.2	49
6SE7025-4RD60	54.0	55
6SE7027-0RD60	69.0	65
6SE7028-1RD60	81.0	71

DC 510 V to 650 V

Order number	In [A]	PWE
6SE7016-1TA61	6.1	4
6SE7018-0TA61	8.0	10
6SE7021-0TA61	10.2	12
6SE7021-3TB61	13.2	19
6SE7021-8TB61	17.5	26
6SE7022-6TC61	25.5	36
6SE7023-4TC61	34.0	43
6SE7023-8TD61	37.5	47
6SE7024-7TD61	47.0	53
6SE7026-0TD61	59.0	57
6SE7027-2TD61	72.0	67

DC 675 V to 810 V

Order number	In [A]	PWE
6SE7014-5UB61	4.5	2
6SE7016-2UB61	6.2	6
6SE7017-8UB61	7.8	8
6SE7021-1UB61	11.0	17
6SE7021-5UB61	15.1	24
6SE7022-2UC61	22.0	31
6SE7023-0UD61	29.0	38
6SE7023-4UD61	34.0	45
6SE7024-7UD61	46.5	51

9.3.2 Board configuration

During board configuration, the control electronics is informed in what way the installed optional boards have to be configured. This step is always necessary if optional boards are used.

The unit must be switched to the "Board configuration" status for this purpose. This is done by selecting the "Board configuration" menu. In this menu, parameters are set which are required for adapting the optional boards to the specific application (e.g. bus addresses, baud rates, etc.). After leaving the menu, the set parameters are transferred and the optional boards are initialized.

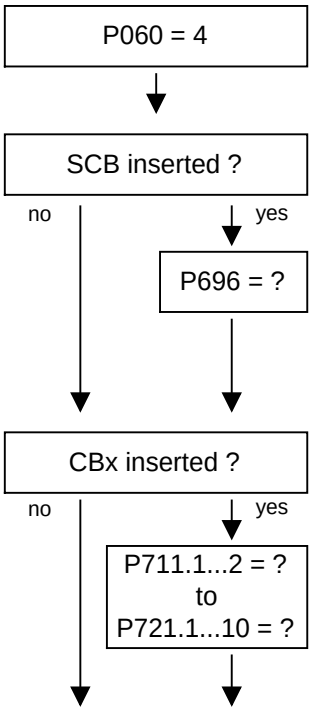

Select "Board configuration" menu

SCB protocol
- 0: SCI
- 1: USS 4-wire
- 2: USS 2-wire
- 3: Peer-to-Peer

Enter the CB parameters 1 to 11 necessary for the inserted communications boards CBx

The necessary CB parameters and their significance can be derived from the function diagrams of the individual communications boards.

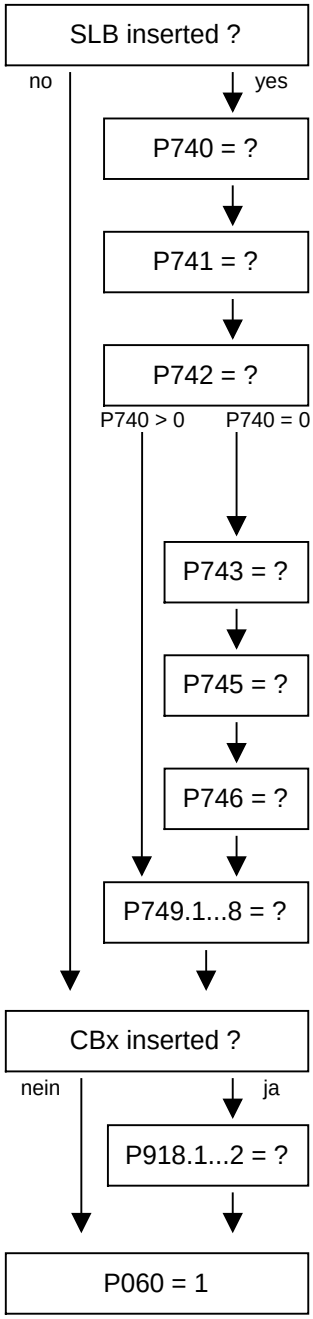

Enter the SLB module address

0: Unit operates as a dispatcher

greater than 0: Unit operates as a transceiver

Enter the SLB telegram failure time in ms

0: No monitoring

greater than 0: Monitoring time in ms

Enter the SLB transmit power (for plastic fiber-optic cables)

1: weak up to 10 m fiber-optic cable length

2: medium up to 25 m fiber-optic cable length

3: strong up to 40 m fiber-optic cable length

NOTE: If glass fiber-optic cables are used, the possible lengths are increased by the factor 7.5.

Enter the number of modules (incl. dispatcher) in the SIMOLINK ring

Enter the number of channels per module

Enter the SIMOLINK cycle time in ms

Enter the SLB read addresses

Enter the CB bus addresses

Return to the parameter menu

Board codes

The visualization parameter r826.x is used for displaying the board codes. These codes enable the type of the installed electronic boards to be determined.

Parameter	Index	Position
r826	1	Basic board
r826	2	Slot A
r826	3	Slot B
r826	4	Slot C
r826	5	Slot D
r826	6	Slot E
r826	7	Slot F
r826	8	Slot G

If a technology board (T100, T300, TSY) or an SCB1 or SCB2 is inserted in mounting positions 3 or 2, their board code can be found in the following indices:

Parameter	Index	Position
r826	5	Mounting position 2
r826	7	Mounting position 3

General board codes

Parameter value	Significance
90 to 109	Mainboards or Control Unit
110 to 119	Sensor Board (SBx)
120 to 129	Serial Communication Board (Scx)
130 to 139	Technology Board
140 to 149	Communication Board (Cbx)
150 to 169	Special boards (Ebx, SLB)

Special board codes

Board	Significance	Parameter value
CUVC	Control Unit Vector Control	92
CUMC	Control Unit Motion Control	93
TSY	Tacho and synchronization board	110
SCB1	Serial Communication Board 1 (fiber-optic cable)	121
SCB2	Serial Communication Board 2	122
T100	Technology board	131
T300	Technology board	131
T400	Technology board	134
CBX	Communication Board	14x
EB1	Expansion Board 1	151
EB2	Expansion Board 2	152
SLB	SIMOLINK bus interface	161

9.3.3 Drive setting

During the drive setting, the control electronics is informed about the incoming voltage supply with which the drive converter is operating, about the connected motor and about the motor encoder. In addition, the motor control (V/f open-loop control or vector control) and the pulse frequency are selected. If required, the parameters necessary for the motor model can be calculated automatically. Furthermore, the normalization values for current, voltage, frequency, speed and torque signals are determined during the drive setting.

For start-up of the induction motor, first enter the manufacturer's parameters completely (see below):

- In doing so, you must observe whether the induction motor has a star or a delta connection.
- You must always use the S1 data from the rating plate.
- You must enter the rating data for **mains duty** (not converter duty).
- You must always enter the correct rated motor current **P102** (rating plate). If there are two different rated currents on the rating plate for special fan motors, you must use the value for M ~ n for constant torque (not M ~ n^2). A higher torque can be set with the torque and active-current limits.
- The accuracy of the rated motor current has a direct effect on the torque accuracy, as the rated torque is normalized to the rated current. If a rated current is increased by 4 %, this will also approximately result in a 4 % increase in the torque (referred to the rated motor torque).
- For group drives, you have to enter the total rated current **P102** = x*$I_{mot,nenn}$
- If the rated magnetizing current is known, you should enter it during the drive setting in **P103** (in % $I_{mot,nenn}$). If this is done, the results of the "Automatic parameterization" (**P115** = 1) will be more precise.
- As the rated magnetizing current **P103** (not to be confused with the no-load current during operation with rated frequency **P107** and rated voltage **P101**) is usually not known, you can first enter 0.0 %. With the aid of the power factor (cosPHI) **P104,** an approximate value is calculated and displayed in **r119**.
  Experience shows that the approximation supplies values which are rather on the large side in the case of motors with a high rating (over 800 kW), whereas it supplies values which are slightly too low in the case of motors with low rating (below 22 kW).
  The magnetizing current is defined as a field-generating current component during operation at the rated point of the machine (U = **P101**, f = **P107**, n = **P108**, i = **P102**).
- The rated frequency **P107** and the rated speed **P108** automatically result in the calculation of the pole pair number **P109**. If the connected motor is designed as a generator and the generator data are on the rating plate (oversynchronous rated speed), you have to correct the pole pair number manually (increase by 1 if the motor is at least 4-pole), so that the rated slip (**r110**) can be correctly calculated.

- For induction motors, you have to enter the actual rated motor speed, and not the synchronous no-load speed in **P108**, i.e. the slip frequency at nominal load has to be derived from parameters **P107...P109**.
- The rated motor slip (1 - **P108**/60 x **P109**/**P107**) should usually be greater than 0.35 % x **P107**.
  These low values are, however, only achieved in the case of motors with a very high rating (above approx. 1000 kW).
  Motors with average rating (45..800 kW) have slip values around 2.0...0.6 %.
  Motors with low rating (below 22 kW) can also have slip values up to 10 %.
- It is possible to achieve a more accurate evaluation of the rated slip after standstill measurement (**P115** = 2) by taking into account the temperature evaluation for the rotor resistance **P127**.
  On cold motors (approx. 20 °C), the value is usually around 70 % (± 10 %) and on warm motors (operating temperature) around 100 % (± 10 %). If there are any large differences, you can proceed on the assumption that the rated frequency **P107** or the rated speed **P108** do not correspond to the real values.
- If the rated motor frequency (engineered!) is below 8 Hz, you have to set **P107** = 8.0Hz in the drive setting. The rated motor voltage **P101** has to be calculated in the ratio 8 Hz / $f_{Mot,N}$ and the rated motor speed **P108** should result in a much greater slip:
  P108 = ((8 Hz - **P107**$_{old}$) x 60 / **P109**) + **P108**$_{old}$.

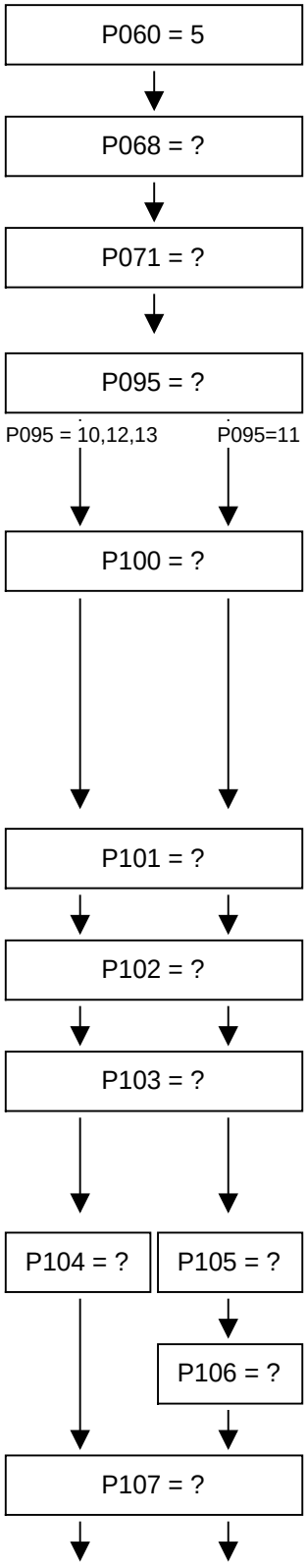

Select "Drive setting" menu

Output filter 0 = without output filter
1 = with sinusoidal output filter
2 = with dv/dt output filter

Input unit line voltage in V
AC units: r.m.s. alternating voltage
DC units: DC link voltage

Enter type of motor
10: Induct. IEC (international standard)
11: Induct. NEMA (US standard)
12: Sync. motor, separately excited (special applications)
13: Sync. motor permanently excited (special applications)

Enter the type of open-loop/closed-loop control
0: v/f control + speed control
1: v/f control
2: v/f control textile
3: Speed control without tachometer (f control)
4: Speed control with tachometer (n control)
5: Torque control (M control)
Note: For motor ratings over approx. 200 kW one of the vector control types should be used (P100 > 2)

Enter the rated motor voltage in V
as per rating plate

Enter the rated motor current in A
as per rating plate
(group drives: total of all motor currents)

Enter the motor magnetizing current as a % of the rated motor current
If value is not known, set P103 = 0, the value is then automatically calculated when you leave the drive setting (see r119).

IEC motor: Cos (phi) as per rating plate
NEMA motor: nominal rating [Hp]
(group drives: total of all ratings)

NEMA motor: Enter the motor efficiency in %
as per rating plate

Enter the rated motor frequency in Hz
as per rating plate

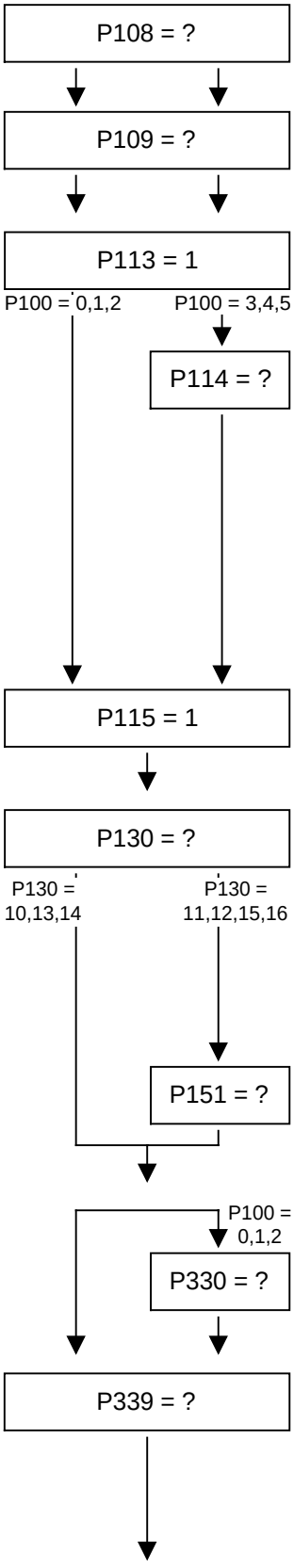

Enter the rated motor speed in rpm
as per rating plate

Enter the motor pole pair number
(is automatically calculated if P107 and P108 are changed)

Enter the rated motor torque in Nm
as per rating plate or motor catalog (is only used for normalizing the process data and visualization parameters)

Process-related conditions for closed-loop control
0: Drive for standard applications (e.g. pumps)
1: Drive with strong torsion, gear play, large moments of inertia (e.g. paper machine)
2: Drive for very dynamic accelerations (without load moments) (e.g. shears)
3: Drive for strong shock stressing (e.g. roll drive)
4: Drive with high smooth running characteristics at low speeds.
5: Drives with modest response requirements, which can be optimized in their efficiency with frequent part-load operation.
6: Drive with high starting moments.

Calculate motor model "Automatic parameterization"

Select the motor encoder
10: Without motor encoder
11: Pulse encoder
12: Pulse encoder with control track
13: Analog input 1
14: Analog input 2
15: Pulse encoder with zero track
16: Pulse encoder with zero and control track

Enter the pulse number/revolution of the pulse encoder

Characteristic 0: Linear characteristic (constant torque drives)
1: Parabolic characteristic (fans/pumps)

Release the edge modulation systems (FLM)
0: All systems
1: Edge modulation systems from 60 Hz
2: Edge modulation systems from 100 Hz
3: No edge modulation systems
4: Overmodulated space vector modulation

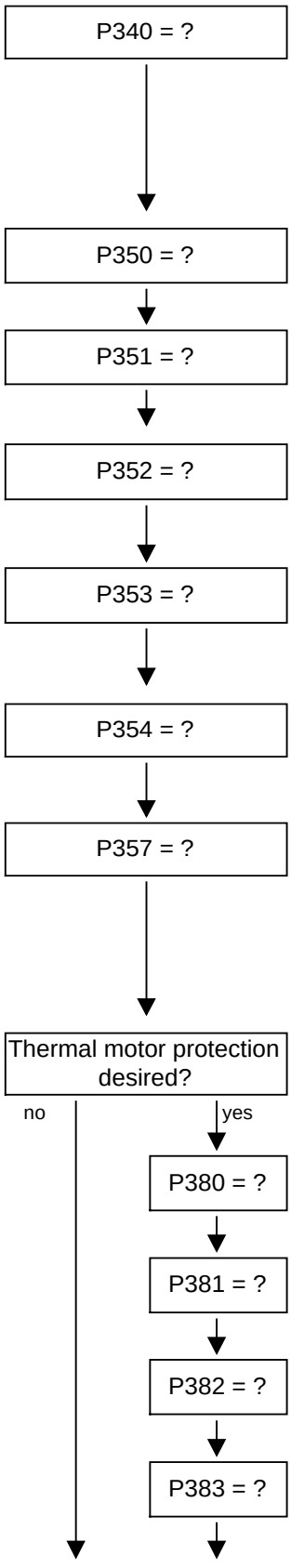

Enter the pulse frequency in kHz
Pulse frequency for asynchronous space vector modulation
Notes:
- The adjustable range depends on the converter/inverter
- An increase in the pulse frequency results in a reduction of the maximum output current (see "Technical Data", derating curves)

Enter the reference value for all current quantities in A
(Normalization quantity for current limitations as well as current setpoints and actual values)

Enter the reference value for all voltage quantities in V
(Normalization quantity for voltage limitations as well as voltage setpoints and actual values)

Enter the reference value for all frequency quantities in Hz
(Normalization quantities for frequency limitations, frequency setpoints and actual values)
Note: The parameter P353 is automatically adjusted.

Enter the reference value for all speed quantities in rpm
(Normalization quantity for speed limitations, speed setpoints and actual values)
Note: The parameter P352 is automatically adjusted.

Enter the reference value for all torque quantities in Nm
(Normalization quantity for torque limitations, torque setpoints and actual values)

Enter the sampling time T0 in ms
The sampling time T0 is for determining the calculating frequency of all functions.
The sampling times T1...T19 are multiples of sampling time T0
Note: A very short sampling time T0 can lead to a calculation time overload if several function blocks are activated at the same time!

System with motor protection according to UL regulation?
The motor temperature is calculated via the motor current.
(In the pre-setting, motor overload protection in accordance with UL regulation is activated!)

Enter the motor temperature for output of the alarm A023 "Motor overtemperature"

Enter the motor temperature for output of the fault F020 "Motor overtemperature"

Specify motor cooling
0: self-ventilated
1: forced-ventilated

Enter the thermal time constant of the motor in s

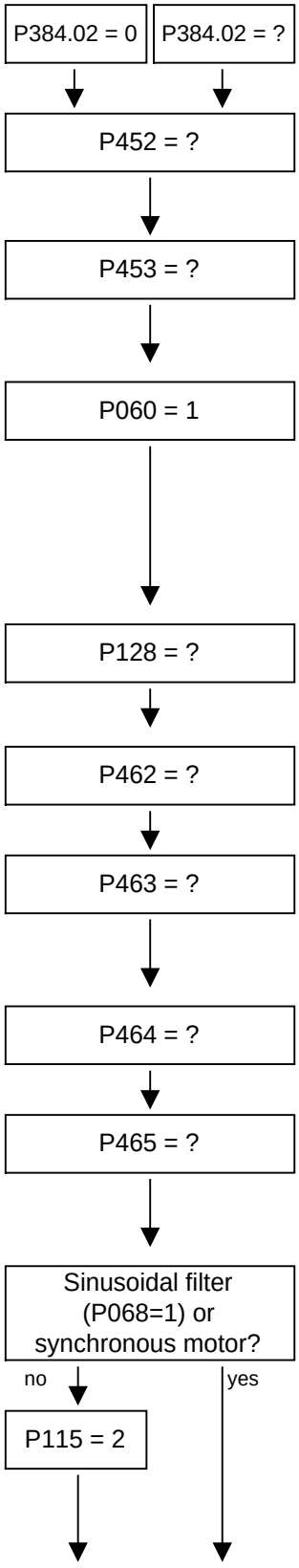

Enter the motor load limit 1...300 %

Enter the maximum frequency or speed in positive direction of rotation in %
The value is referred to P352 (reference frequency) and P353 (reference speed)

Enter the maximum frequency or speed in negative direction of rotation in %
The value is referred to P352 (reference frequency) and P353 (reference speed)

Return to the parameter menu

Note
When the "Drive settings" menu is exited, the entered parameter values are checked for their plausibility. Non-plausible parameter settings result in a fault. The erroneously set parameters are entered in parameter r949 (fault value).

Enter the maximum output current in A

Enter the acceleration time from standstill up to reference frequency (P352)

Enter the unit for acceleration time P462
0 = Seconds
1 = Minutes
2 = Hours

Enter the deceleration time from reference frequency (P352) up to standstill

Enter the unit for deceleration time P464
0 = Seconds
1 = Minutes
2 = Hours

Calculate motor model "Motor identification at standstill"
Note
Current flows through the motor and the rotor rotates!
After pressing the "P" key, the alarm message "A087" appears.
The converter must be turned on within 20 secs!

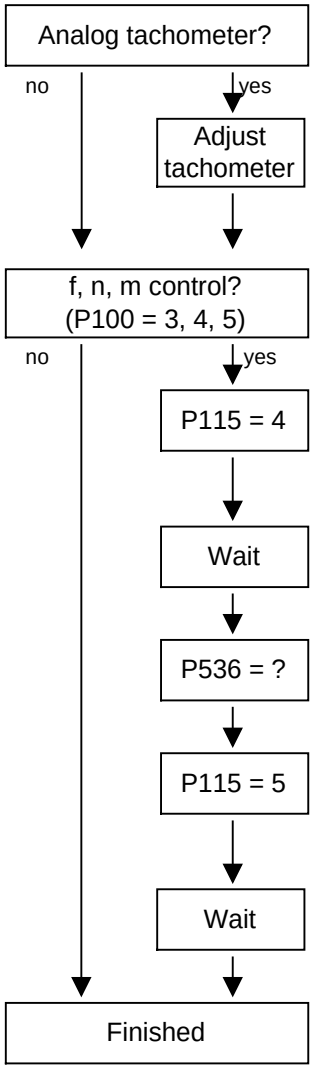

Analog tachometer present?

Adjust tachometer
Tachometer to ATI: See operating instructions for ATI
Tachometer to terminal strip: See function diagrams for analog inputs

Calculate motor model "No-load measurement"
Note: Current flows through the motor and the rotor rotates!
After "P" key is pressed, the alarm message "A080" appears.
The converter must be switched on within 20 seconds!

Wait until the converter is "Ready for ON" again (°009)
For fault "Fxxx", refer to chapter "Faults and alarms"

Enter the dynamic performance of the speed control circuit in %
Important for subsequent controller optimization.

Calculate motor model "Controller optimization"
Note: Current flows through the motor, the rotor rotates!
After "P" is pressed, the alarm message "A080" appears.
The converter must be switched on within 20 seconds!

Wait until the converter is powered-down (Operating status "Ready for ON" (°009))
For fault "Fxxx", see chapter "Faults and alarms"

9.4 Notes on parameterization

The parameter list covers the setting parameters and visualization parameters of all available motor types (induction motors and synchronous motors), as well as all possible open-loop and closed-loop control modes (e.g. V/f characteristic, speed control).

The constellation under which this parameter is influenced or whether it is displayed at all is indicated under "Preconditions" in the parameter description.

Unless otherwise specified, all percentage values refer to the reference quantities in P350 to P354.

If reference quantities are changed, this will also change the significance of the parameters with percentage normalization (e.g. P352 = Maximum frequency).

Function diagrams and start-up instructions for separately excited synchronous motors (with damping cage and excitation via sliprings) are available as separate instructions.

The following parameters are only effective for these synchronous motors:

P75 to P88; P155 to r168, P187, P258, P274, P297, P298, P301, r302, P306 to P312.

The following parameters are calculated or set to fixed values during automatic parameterization (P115 = 1):

P116	P236	P295	P337
P117	P240	P303	P339
P120	P258	P306	P344
P121	P259	P313	P347
P122	P273	P315	P348
P127	P274	P316	P388
P128	P278	P319	P392
P161	P279	P322	P396
P215	P283	P325	P471
P216	P284	P326	P525
P217	P287	P334	P536
P223	P291	P335	P602
P235	P293	P336	P603

- P350 to P354 are only set to the rated motor quantities in the converter status "Drive setting" (P060 = 5) or "Quick parameterization (P060 = 3).
- Automatic parameterization is also carried out by the standstill measurement P115 = 2, 3.

- During the standstill measurement P115 = 2, 3, the following parameters are measured or calculated:
  - P103, P120, P121, P122, P127, P347, P349.
    The controller settings resulting from these values are in: P283, P284, P315, P316.
- During the rotating measurement P115 = 3, 4, P103 and P120 are adjusted.
- During the n/f controller optimization P115 = 5, the parameters P116, P223, P235, P236, P240 and P471 are determined.

In principle, automatic parameterization (P115 = 1) or motor identification (P115 = 2, 3) should be carried out as soon as one of the following parameters are adjusted in the converter status "Drive setting" (P060 = 5):

P068 = Output filter

P095 = Motor type

P100 = Control type

P101...P109 = Motor rating plate data

P339 = Release of modulation system

P340 = Pulse frequency

P357 = Sampling time

In exceptional cases this is not necessary:

- If P068 is only adjusted between 0 and 2 (dv/dt filter).
- If P340 is adjusted in integer increments, e.g. from 2.5 kHz to 5.0 kHz...7.5 kHz... etc.
- If P339 is not set to overmodulated space vector modulation.
  If P339 = 4 the modulation depth P342 must be additionally set to approx. 90 %.
- If changeover is made between speed and torque control (P100 = 4, 5).
- If changeover is made between speed and frequency control and the following parameters are adapted:

	f-control (P100 = 3)	**n-control (P100 = 4)**
P315 = EMF Reg.Kp	2 x Kp	Kp
P223 = Smooth.n/f(act)	≥ 0 ms	≥ 4 ms
P216 = Smooth. n/f(pre)	≥ 4.8 ms	≥ 0.0 ms
P222 = Src n/f(act)	KK0000	KK0000 (KK0091)

The speed controller dynamic response may have to be reduced in the case of encoder-less speed control (frequency control) (Reduce gain (P235); increase Tn (P240)).

9.4.1 Drive setting according to process-related boundary conditions

In order to support start-up, process-related characteristics can be entered in **P114.** In a subsequent automatic parameterization **(P115** = 1) or motor identification **(P115** = 2, 3) and controller optimization **(P115** = 3, 5), parameter adjustments are made in the closed-loop control which are advantageous for the selected case, as experience has shown.

The parameter adjustments can be taken from the following table. The table clearly shows which parameters have a decisive influence on the closed-loop control. The values themselves are understood to be qualitative values and can be further adjusted according to the process-related requirements.

If the type of process-related boundary conditions is not evident in the current case (e.g. high smooth running characteristics at low speeds with simultaneously fast acceleration processes), the parameter settings can also be combined (manually). In any case, it is always sensible to perform start-up with the **standard setting** in order to then set the indicated parameters one after the other.

The settings of P114 = 2...4 are only possible if no gearless conditions are present

P114 =
- 0: Standard drive (e.g. pumps, fans)
- 1: Torsion, gear play and large moments of inertia (e.g. paper machines)
- 2: Acceleration drives with constant inertia (e.g. shears)
- 3: High load surge requirements (in the case of f-control only possible from approx. 20%fmot,n)
- 4: High smooth running characteristics at low speeds (in the case of n-control; with a high encoder pulse numberl)
- 5: Efficiency optimization at partial load by flux reduction (low dynamic loading drives)
- 6: High start-up torque (heavy-duty start-up)

Only deviations from the standard setting (P114 = 0) are indicated:

	P114 = 0	P114 = 1	P114 = 2	P114 = 3	P114 = 4	P114 = 5	P114 = 6
P216=Smooth n/f(FWD)	0ms (n-Reg.) 4ms (f-Reg.)	4.8ms (n-R.)					
P217=Slip Fail Corr'n	0=off		2=on (n-R.)				
P223=Smooth n/f(act)	4ms (n-Reg.) 0ms (f-Reg.)	100ms					
P235=n/f-Reg Gain1	3.0 or 5.0				12.0 (n-Reg.)		
P236=n/f Reg Gain2	3.0 or 5.0				12.0 (n-Reg.)		
P240=n/f-Reg Tn	400ms				40ms (n-R.)		
P279=Torque (dynamic)	0.0%						80% (f-Reg.)
P287=Smooth Vd(act)	9		0	0			
P291=FSetp Flux (set)	100%					110%	
P295=Efficiency Optim	100%=off	99.9%				50%	
P303=Smooth Flux (set)	10-20ms	60ms				100 (n-Reg.) 500 (f-Reg.)	
P315=EMF Reg Gain	Gain(n)		1.5*Gain(n) (f-Reg.)	1.5*Gain(n) (f-Reg.)			
P339=ModSystemRelease	0=All syst	3=only RZM	3=only RZM	3=only RZM	3=only RZM		
P344=ModDepth Headrm	0.0%	3.0%	3.0%				
P536=n/f RegDyn(set)	50%	20%	100 (n-Reg.) 50% (f-Reg.)	200 (n-Reg.) 100 (f-Reg.)	200 (n-Reg.) 50% (f-Reg.)	25%	100 (n-Reg.) 50% (f-Reg.)

RZM=Space vector modulation

The gain Kp of the speed controller (P235, P236) depends on the inertia of the drive and has to be adapted if necessary.

Symmetrical optimum: P235 = 2 x P116 / P240

Kp = 2 x $T_{start-up}$ / Tn

The start-up time is the time taken by the drive to accelerate to rated speed when the rated torque is specified. This is determined during automatic speed controller optimization.

9.4.2 Changes to the function selection parameter (P052) VC(former)

The function selection parameter P052 of the firmware versions for the previous MASTERDRIVES VC units was used to select the various special functions and start-up steps. In order to make this important parameter more comprehensible for the user, the function groups "Special functions" and "Start-up steps" in the CUVC firmware have now been stored in two different parameters as follows:

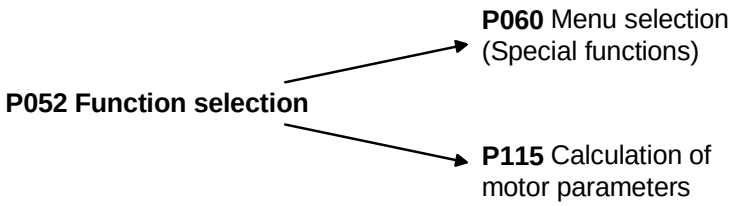

Fig. 9-6 Division of parameter P052(former) into P060 and P115

In addition to this, the new special function "User parameter" has been introduced, and the special function "Drive setting" (P052 = 5) has been subdivided into the functions "Quick parameterization" and "Drive setting". The new special function "Quick parameterization" involves parameterization for standard applications, and the new special function "Drive setting" involves parameterization for expert applications.

The special function "Download/Upread" (P052 = 3) has been subdivided into the functions "Download" and "Upread".

P060	Menu selection	P052 (former)	Function selection
0=	User parameter	--	See parameter list P060
1=	Parameter menu	0=	Return
2=	Fixed settings 1)	1=	Param. Reset
3=	Quick parameterization	5=	Drive Setting
4=	Board configuration	4=	HW Config.
5=	Drive setting	5=	Drive Setting
6=	Download	3=	Download
7=	Upread	3=	Download
8=	Power section definition	2=	MLFB input

1) Selection in the factory setting menu (P366 Factory setting type, activation with P970)

P115	Calculation of motor model	P052 (old)	Function selection
1=	Automatic parameterization	6=	Auto Param.
2=	Motor identification at standstill	7=	Mot ID Stop
3=	Complete motor identification	8=	Mot ID All
4=	No-load measurement	9=	No Load Meas
5=	n/f controller optimization	10=	Reg. Optim.
6=	Self-test	11=	Auto Test
7=	Tachometer test	12=	Tach Test

The new special function P060 = 0 (User parameter) enables the user to put together an important list of parameters especially for his own application.

When P060 = 0 (User parameter) is selected, apart from parameters P053, P060 and P358, only those parameters whose numbers have been entered in indices 4 to 100 of parameter P360 are visible.

10 First Start-up

First start-up of a unit comprises the following work steps:

Unpack and check the units	After removing the packaging, check that the unit is intact and undamaged. Only intact units may be started-up. Please also check that the unit is complete, that the correct optional boards are fitted and that the technology option has been released, if ordered.	See "Transport, Storage, Unpacking"
Mount the unit and install optional boards which have not yet been fitted	Retrofit any optional boards which have not yet been installed, if necessary. Then install the units taking into account the requirements at the point of installation and the EMC instructions.	See "Installation" and "Installation in Conformance with EMC Regulations"
Form the DC link capacitors, if necessary	If the DC link of the unit was de-energized for more than one year, you have to newly form the DC link capacitors.	See "Forming"
Connect the protective conductor, the power cables or the DC link buses and, if present, the external 24 V incoming supply	Starting with the protective conductor, please connect the power cables or the DC link buses and, if present, the external 24 V supply. When laying the cables, please observe the EMC instructions. During this work step, please do not yet connect control cables, communication cables, encoder cables and motor cables (exception: cables for connecting up an OP1S, if parameterization is intended to be carried out via the OP1S).	See "Connecting-up" and "Installation in Conformance with EMC Regulations"
Power up the external 24 V supply or the line voltage	After checking that the cabling has been correctly connected and that it sits properly, power up the external 24 V supply or the line voltage. After the electronic power supply is started, the unit initializes itself. This action can take several seconds. The drive status is subsequently shown on the PMU.	
If necessary, carry out parameter reset to factory setting	If the PMU does not show status °005 after completion of the unit initialization, or if the unit has already been parameterized before, you shoud carry out a parameter reset to factory setting.	See "Parameterization"

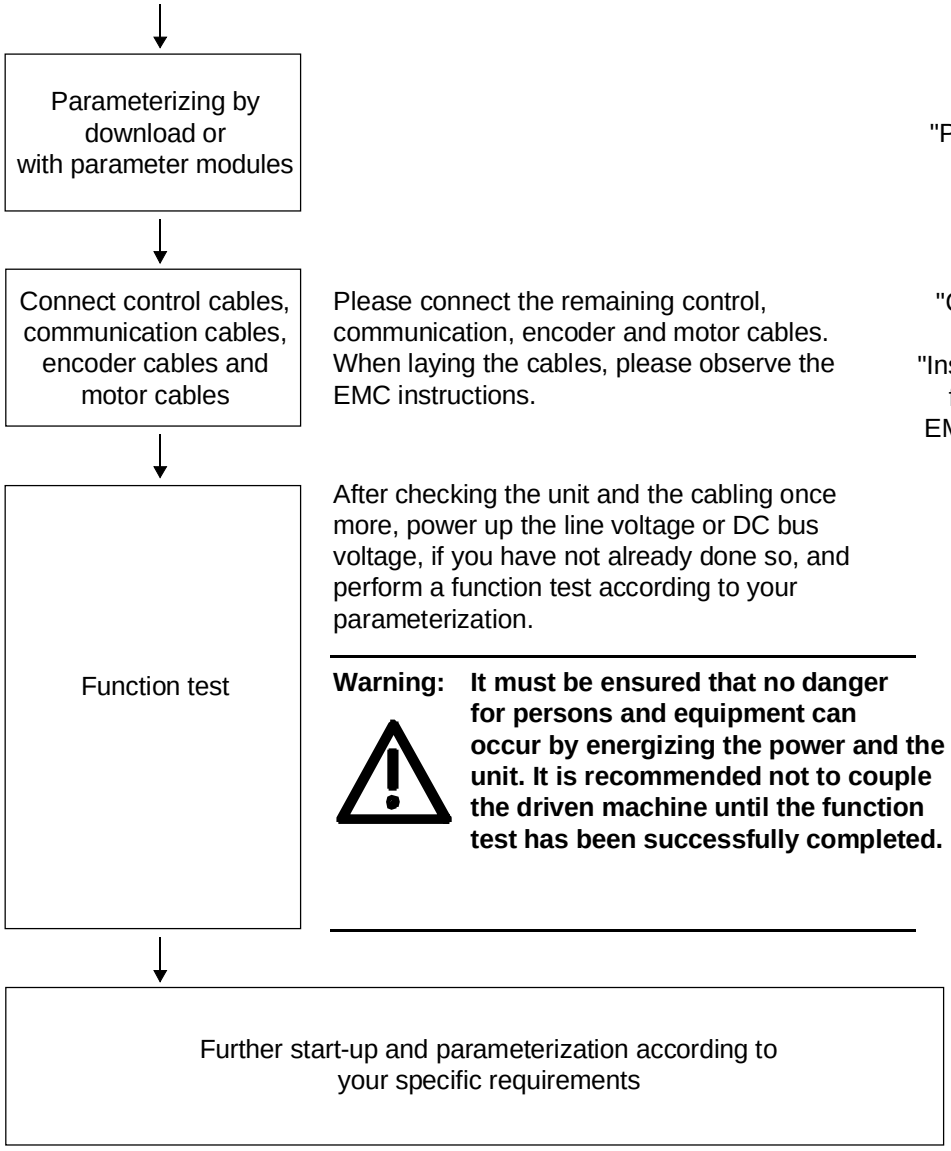
Parameterizing by download or with parameter modules
See "Parameterization"
Connect control cables, communication cables, encoder cables and motor cables
Please connect the remaining control, communication, encoder and motor cables. When laying the cables, please observe the EMC instructions.
See "Connecting-up" and "Installation in Conformance with EMC Regulations"
Function test
After checking the unit and the cabling once more, power up the line voltage or DC bus voltage, if you have not already done so, and perform a function test according to your parameterization.
Warning: It must be ensured that no danger for persons and equipment can occur by energizing the power and the unit. It is recommended not to couple the driven machine until the function test has been successfully completed.
Further start-up and parameterization according to your specific requirements

11 Faults and Alarms

Faults

General information regarding faults

For each fault, the following information is available:

Parameter	r947	Fault number
	r949	Fault value
	r951	Fault list
	P952	Number of faults
	r782	Fault time

If a fault message is not reset before the electronic supply voltage is switched off, then the fault message will be present again when the electronic supply is switched on again. The unit cannot be operated without resetting the fault message. (Exception: Automatic restart has been selected, see P373).

Fault number	Fault	Counter-measure
F001	**Main contactor checkback** If a main contactor checkback is configured, no checkback takes place within the time set in P600 after the power-up command. In the case of externally excited synchronous motors (P095 = 12), there is no checkback for the excitation current unit.	P591 Src Contactor Msg Parameter value must be in conformance with the connection of the main contactor checkback. Check the checkback loop of the main contactor (or the checkback of the excitation current unit in the case of synchronous motors).
F002	**Pre-charging** When pre-charging, the minimum DC link voltage (P071 Line Volts $\times$ 1.34) of 80 % has not been reached. The maximum pre-charging time of 3 seconds has been exceeded.	Check the supply voltage, Compare with P071 Line Volts (compare P071 with the DC link voltage on DC units). Check the rectifier/regenerative unit on DC units. The rectifier/regenerative unit must be switched on before the inverter is switched on.

Fault number	Fault	Counter-measure
F006	**DC link overvoltage** Shutdown has occurred due to excessive DC link voltage. Line voltage I DC voltage range I Shutdown threshold 200 V - 230 V I 270 V – 310 V I appr. 410 V 380 V - 480 V I 510 V – 650 V I appr. 820 V 500 V - 600 V I 675 V – 810 V I appr. 1020 V 660 V - 690 V I 890 V – 930 V I appr. 1220 V For parallel-connected converters (BF L) r949 = 1: Overvoltage in the DC link of the master r949 = 2: Overvoltage in the DC link of the slave.	Check the supply voltage or input DC voltage. Converter is operating in regenerative mode without rectifier possibility. If the converter supply voltage is at the upper tolerance limit and it is operating at full load, F006 can also be caused by a line phase failure. Possibly: • Increase P464 Decel Time, • Activate P515 DC Bus Volts Reg (check P071 beforehand) • Reduce P526 Fly Search Speed. • Reduce P259 Max Regen Power (only for P100 = 3, 4 or 5)
F008	**DC link undervoltage** The lower limit value of 76 % of the DC link voltage (P071 Line Volts), or of 61 % when kinetic buffering has been enabled, has been fallen short of. Undervoltage in the DC link in 'normal' operation (i.e. no SIMULATION). Undervoltage in the DC link with active kinetic buffering and speed less than 10 % of the rated motor speed. It was a 'brief power failure' which was not detected until system recovery (auto restart flag).	Check: • Input DC voltage • DC link
F011	**Overcurrent** Overcurrent shutdown has occurred. The shutdown threshold has been exceeded.	Check • the converter output for short-circuit or ground fault • the load for an overload condition • whether motor and converter are correctly matched • whether the dynamic requirements are too high.
F012	**I too low** During excitation of the induction motor, the current did not rise above 12.5 % of the setpoint magnetizing current for no-load operation.	Only for closed loop n/f/T control (P100 = 3, 4 or 5) If no motor is connected, go into the simulation mode P372. Check current detection, check power section.

Fault number	Fault	Counter-measure
F015	**Motor stall** Motor has stalled or is locked: • if the static load is too high • if the acceleration or deceleration time is too fast or if load change is too fast and too great, • due to incorrect parameterization of the pulse encoder pulse number P151 or of the analog tachometer scaling P138. • due to disturbed speed signals (tachometer shield not connected) The fault is only generated after the time set in P805. The binector B0156 is set, in the status word 2 r553 Bit28. To detect whether the drive is locked, see P792 (Perm Deviation) and P794. With n/f control, this fault is tripped if the torque limits have been reached (B0234). With speed control (P100 = 4) and master drive (see P587), the fault can also point to an interruption in the encoder cable. This case has the same significance as if the drive is locked. With v/f control, the I(max) controller has to be activated (P331). The monitor does not operate with v/f textile applications (P100 = 2). Motor has stalled or is locked: • By reaching the maximum frequency in the case of synchronous motors (P095 = 12,13) As a result of missing or excessively high excitation current in the case of externally excited synchronous motors (P095 = 12): (flux is too small or too great). When the maximum frequency (including control reserves) (B0254) has been reached on synchronous motors, the fault is generated immediately. If the deviations in the rotor flux are too great, first of all, the converter current is switched to zero, the excitation current is reduced and, after some time, the fault message is tripped at the level of the double damping time constant (2*r124.1). During this wait time, the status word bit is set already B0156 (r553.28)	• Reduce load • Release brake • Increase current limits • Increase P805 PullOut/BlckTime • Increase P792 response threshold for set/actual deviation Only for f/n/T control (P100 = 3, 4, 5) • Increase torque limits or torque setpoint Only n/T control or v/f control with speed controller: (P100 = 0, 4, 5) • Check tachometer cable breal • Check pulse encoder pulse number • Check analog tachometer scaling • Connect shield of tachometer cable on motor side and converter side • Reduce smoothing of speed pre-control P216 (only n/T control) Only frequency control: (P100 = 3) • Slow down acceleration time (see also P467-ProtRampGen Gain) • Increase current in the lower frequency range (P278, P279, P280) • Switch in speed controller pre-control (P471>0) • Set EMF controller more dynamically (P315) to max. approx. 2 • Increase changeover frequency for the EMF model (P313) • Replace by speed control with pulse encoder In the case of overmodulated n/f controller: • Track speed setpoint with the speed actual value so that the set/actual deviation is always less than that set in P792. Only for synchronous motor: (P095 = 12) • Check current limits of the excitation unit. • Check excitation current setpoint and actual value (incl. wiring) • Check voltage limits of the excitation unit during dynamic current changes. • Check drive system for resonance oscillations.

Fault number	Fault	Counter-measure
F017	**SAFE OFF in operation**	Check whether the switch for SAFE OFF (X009/5-6) is open (only for devices with Order No....-11, ...-21,...-31,...-61).
F018	**F set fly** The found set-frequency could not be implemented because the additional setpoint is too high.	Check additional setpoint. Power up after coasting. Release both directions of rotation.
F019	**Motor not found** Motor has not been found (during flying restart without tachometer).	Power up after coasting. Possibly increase P525 Fly Search Amps.
F020	**Motor temperature** The motor temperature limit value has been exceeded. r949 = 1 Limit value of motor temperature exceeded r949 = 2 Short-circuit in the cable to the motor temperature sensor or sensor defective r949 = 3 wire break in the cable to the motor temperature sensor or sensor defective	Check the motor (load, ventilation, etc.). The actual motor temperature can be read in r009. Check P381 Mot Tmp Fault Check the KTY84 input at connector X103:29,30 for short-circuit.
F021	**Motor I2t** Parameterizable limit value of the I2t monitoring for the motor has been exceeded.	Check: P383 Mot Tmp T1
F023	**Inverter temperature** The limit value of the inverter temperature has been exceeded. r949 = 1: Limit value of inverter temperature has been exceeded. r949 = 2: Sensor 1: Wire break of sensor cable or sensor defective r949 = 18: Sensor 2: Wire break of sensor cable or sensor defective r949 = 34: Sensor 3: Wire break of sensor cable or sensor defective r949 = 50: Sensor 4: Wire break of sensor cable or sensor defective	Measure the air intake and ambient temperature. Please observe the reduction curves at ϑ >40 ºC. Check: • Whether the fan -E1 is connected and is rotating in the correct direction. • That the air entry and discharge openings are not restricted. • Temperature sensor at -X30
F025	**UCE Ph. L1** There has been an UCE shutdown in phase L1.	Check: • Phase L1 for short-circuit or ground fault (-X2:U2 – including motor). • That CU is correctly inserted. • That the switch for 'SAFE OFF' (X9/5-6) is open (only for units with Order No. ...-11, ...-21,...-31,...-61).

Fault number	Fault	Counter-measure
F026	**UCE Ph. L2** There has been an UCE shutdown in phase L2.	Check: • Phase L2 for short-circuit or ground fault (-X2:V2 – including motor). • That CU is correctly inserted. • That the switch for 'SAFE OFF' (X9/5-6) is open (only for units with Order No. ...-11, ...-21,...-31,...-61).
F027	**UCE Ph. L3** There has been an UCE shutdown in phase L3.	Check : • Phase L3 for short-circuit or ground fault (-X2:W2 – including motor). • That CU is correctly inserted. • That the switch for 'SAFE OFF' (X9/5-6) is open (only for units with Order No. ...-11, ...-21,...-31,...-61).
F028	**Supply phase** The frequency and the amplitude of the DC link ripple indicate a single-phase power failure.	Check the supply voltage.
F029	**Meas. value sensing** A fault has occurred in the measured value sensing system; • (r949 = 1) Offset adjustment not possible in phase L1 • (r949 = 2) Offset adjustment not possible in phase L3 • (r949 = 3) Offset adjustment not possible in phases L1 and L3 • (r949=65) Autom. Adjustment of the analog inputs is not possible	Fault in measured value sensing. Fault in power section (valve cannot block) Fault on CU
F035	**Ext. fault 1** Parameterizable external fault input 1 has been activated	Check: • whether there is an external fault • whether the cable to the appropriate digital input has been interrupted • P575 Src No ExtFault1
F036	**Ext. fault 2** Parameterizable external fault input 2 has been activated	Check: • Whether there is an external fault • Whether the cable to the appropriate digital input has been interrupted • P586 Src No ExtFault2

Fault number	Fault	Counter-measure
F037	**Analog input**	Check the connection to • Analog input 1 -X102:15, 16. • Analog input 2 -X102: 17, 18. Check parameters • P632 CU AnaIn Conf • P634 CU AnaIn Smooth • P631 CU AnaIn Offset
F038	**Voltage OFF during parameter storage** During a parameter task, a voltage failure occurred on the board.	Re-enter the parameter. The number of the parameter concerned can be seen in fault value r949.
F040	**AS internal** Incorrect operating status	Replace CU (-A10)
F041	**EEPROM fault** A fault has occurred when storing the values in the EEPROM.	Replace CU (-A10)
F042	**Calculating time** Calculating time problems	Reduce the calculating time load: • Increase P357 Sampling Time • Calculate individual blocks in a slower sampling time Observe r829 CalcTimeHdroom.
F044	**BICO Manager**	
F045	**Opt. Board HW** A hardware fault has occurred when accessing an optional board.	Replace CU Check connection of the board subrack to the boards
F046	**Par. Task**	Power the unit down and up again. Replace CU (-A10).
F047	**Internal calculating time** The calculating time in the gating unit computer is not sufficient.	Replace CU (-A10). For synchronous motors (P095 = 12): Pulse frequency is set too high (P340 > 2kHz).
F048	**Internal pulse frequency**	Change P340 Pulse Frequency.
F049	**SW Version** The firmware versions on the CU have a different firmware release.	Use uniform firmware
F050	**TSY Init.** Error when initializing the TSY board	Check: • Whether the TSY is correctly inserted

Fault number	Fault	Counter-measure
F051	**Speed encoder** Digital tachometer or analog tachometer sensing are faulty.	Check the parameters: • P130 Src SpdActV • P151 • P138 AnalogTachScale • P109 Motor #PolePairs The product of P109 and P138 must be smaller than 19200. Check or replace tachometer. Check connection to tachometer. Replace CU
F052	**n-Cntr. Input** The fault input on the TSY has been active.	Cancel tachometer with control track P130 Src Spd ActV Replace TSY. Check the tachometer connection at the TSY. Several versions are possible, depending on the type of tachometer.
F053	**Tachometer dn/dt** The permissible change value of the speed encoder signal P215 dn(act,perm) has been doubly exceeded.	Check tachometer cables for interruptions. Check earthing of tachometer shield. • The shield must be connected both at the motor and the converter side. • The encoder cable must not be interrupted. • The encoder cable must not be laid together with the power cables. • Only recommended encoders should be used. • In the case of a signal fault, the DT1 board may have to be used. If necessary, change P215
F054	**Sensor board initialization fault**	Fault value r949 1: Board code incorrect 2: TSY not compatible 20: TSY board double
F056	**SIMOLINK telegram failure**	Check: • Fiber-optic cable ring • Whether an SLB in the ring is without voltage • Whether an SLB in the ring is faulty • Check P741 (SLB Tlg OFF)
F058	**Parameter error during parameter task**	No counter-measure

Fault number	Fault	Counter-measure
F059	**Parameter error after factory setting/initialization**	The number of the inconsistent parameter is indicated in fault value r949. Correct this parameter (ALL indices) and power down and power up the voltage again. Depending on circumstances, several parameters may be concerned, i.e. repeat the procedure.
F060	**MLFB is missing** This is set if the MLFB = 0 after exiting INITIALIZATION (0.0 kW). MLFB = order number.	After acknowledgement, in INITIALIZATION enter a suitable MLFB in parameter P070 MLFB (6SE70..). (Only possible with the corresponding access stages to both access parameters).
F061	**Incorrect parameterization** A parameter entered during drive setting (e.g. P107 Mot Rtd Freq, P108 Mot Rtd Speed, P340 Pulse Frequency) is not in a permissible range (depending on control type)	Acknowledge the fault and change the corresponding parameter value. The missing parameter is indicated in r949 as a fault value.

Fault number	Fault	Counter-measure
F062	**Multi-parallel circuit** Fault in connection with the multi-parallel circuit or board ImP1 has been detected.	r949 = 10: Communications card does not reply. When writing the control word, BUSY is not active if CSOUT is inactive. Communications card is probably not inserted. r949 = 11,12: Timeout during BUSY during initialization. BUSY does not become active within 1 sec. r949 = 15: Timeout during BUSY during normal communication. BUSY does not become active within 1 sec. r949 = 18: Timeout when reading out the fault information from the ImPIs. Within one second after activation of FAULT no fault cause can be supplied by the ImP1. r949 = 20+i: HW conflict. This is set if bit HWCONF is set in status word of slave i. (Fault in the configuration of the multi-parallel circuit) r949 = 30+i: HW version of ImPI is not compatible. The relevant slave number is contained in i. r949 = 40: Number of slaves does not tally with the setpoint number of slaves of the unit. r949 = 50+i: Inconsistency in the number of slaves. The number of slaves notified by the ImPI is not in conformance with the number of status words or with the setpoint number of slaves of the MLFB. Counter-measure: • Check ImPI or communications card and replace, if necessary. • Check configuration of multi-parallel circuit. • Check parameterization. • Replace CU. • Replace ImPI.
F065	**SCom Telegram** No telegram was received at an SCom interface (SCom/USS protocol) within the telegram failure time.	r949 = 1 SCom1 r949 = 2 SCom2 • Check the connection CU -X100:1 to 5 and check the connection PMU -X300. • Check “Scom/SCB TLG OFF“ P704.01 (SCom1) and P704.02 (SCom2) • Replace CU (-A10).

Fault number	Fault	Counter-measure
F070	**SCB Init.** Error during initialization of the SCB	r949 = 1: Board code incorrect r949 = 2: SCB board not compatible r949 = 5: Initialization data error • Check parameter SCB Protocol P696 parameter and Scom/SCB Baud Rate P701.03 r949 = 6: Timeout during initalization r949 = 7: SCB board double r949 = 10: Error in configuration channel
F072	**EB initialization error**	r949 = 2: 1. EB1 not compatible r949 = 3: 2. EB1 not compatible r949 = 4: 1. EB2 not compatible r949 = 5: 2. EB2 not compatible r949 = 21: There are three EB1 boards r949 = 22: There are three EB2 boards
F073	**AnaIn1 SL1** 4 mA at analog input 1, slave1 fallen short of	Check the connection between the signal source and the SCI1 (Slave 1) -X428:4, 5.
F074	**AnaIn2 SL1** 4 mA at analog input 2, slave1 fallen short of	Check the connection between the signal source and the SCI1 (Slave 2) -X428:7, 8.
F075	**AnaIn3 SL1** 4 mA at analog input 3, slave1 fallen short of	Check the connection between the signal source and the SCI1 (Slave 3) -X428:10, 11.
F076	**AnaIn1 SL2** 4 mA at analog input 1, slave2 fallen short of	Check the connection between the signal source and the SCI1 (Slave1) -X428:4, 5.
F077	**AnaIn2 SL2** 4 mA at analog input 2, slave2 fallen short of	Check connection between signal source and SCI1 (Slave 2) -X428:7,8.
F078	**AnaIn3 SL2** 4 mA at analog input 3, slave2 fallen short of	Check connection between signal source and SCI1 (Slave 3) -X428:10, 11.
F079	**SCB Telegram** No telegram has been received by the SCB (USS, Peer-to-Peer, SCI) within the telegram failure time.	• Check connection of SCB1(2). • Check P704.03“SCom/SCB TLG OFF“. • Replace SCB1(2). • Replace CU (-A10).

Fault number	Fault	Counter-measure
F080	**TB/CB Init.** Error during initialization of the board at the DPR interface	r949 = 1: TB/CB not inserted or TB/CB board code incorrect r949 = 2 TB not compatible r949 = 3: CB not compatible r949 = 5: Error in initialization data r949 = 6: Timeout during initialization r949 = 7: TB/CB board double r949 = 10: Error in configuration channel Check that the T300 / CB board is inserted correctly Check the CB initialization parameter: • P918 CB Bus Address • P711 to P721 CB parameters 1 to 11
F081	**Opt. Board Heartb** TB, CB or SCB no longer processes the monitoring counter	r949 = 0: TB/CB Heartbeat counter r949 = 1: SCB Heartbeat counter • Replace SCB, TB or CB • Check connection between subrack and optional boards
F082	**TB/CB Tlg** No new process data have been received by the TB or the CB within the telegram failure time.	r949 = 1: TB/CB r949 = 2: 2. CB • Check the connections of the CB/TB. • Check P722 “CB/TB TLG OFF“. • Replace CB or TB.
F087	**SIMOLINK initialization fault**	• Replace CU • Replace SLB
F090	**MId Param.** An error occurred when attempting to change a parameter from the standstill measurement or the rotating measurement (Mot ID).	Power down and power up again. If it re-occurs, replace the CU.
F091	**MId Time** The rotating measurement takes longer than programmed in a measured status. Possible causes: • Load torque too high • Load torque not uniform • Ramp-function generator disabled	Eliminate the cause and re-start the measurement (power up the converter again). If it re-occurs, replace the CU.

Fault number	Fault	Counter-measure
F095	**MId n(set)** Due to entries for • Permissible phase sequence • Maximum frequency, • Minimum speed, • Changeover frequency between V and I model, • Start of field-weakening frequency, • Frequency suppression bandwidth It was not possible to determine a permissible frequency range for the rotating measurement.	There must be a 10% frequency range which lies above 1.1 times the changeover frequency and below 0.9 times the start of field-weakening frequency. Possible counter-measures; • Permit both phase sequences • Increase maximum frequency • Reduce minimum speed, • Reduce changeover frequency between the V and I model. • Reduce or remove the frequency suppression bandwidth.
F096	**MId abort** The rotating measurement was aborted due to inadmissible external intervention.	The fault value in r949 defines the type of intervention: 4 Setpoint inhibit 5 Changeover, setpoint channel 8 Unexpected change in the converter status 12 Motor data set changeover (for function selection "Compl. Mot ID“) 13 Changeover to slave drive 14 Motor data set changeover to data set with v/f_charac 15 Controller inhibit is set 16 Ramp-function generator is disabled 17 Selection "Tacho test" for F controller 18 Ramp-function generator stopped Eliminate cause
F097	**MId measured value** The measured values for the nominal ramp-up time when optimizing the controller deviate too greatly. Cause: very unsteady load torque	If necessary, increase the torque limit values to 100 percent
F098	**MId Tachof** The rotating measurement has detected a fault in the speed actual value signal. The fault value defines the type of fault. The fault message may have been erroneously generated if the drive speed is externally forced (e.g. completely locked drive generates the "no signal" message)	The fault value in r949 defines the type of intervention 4 No speed signal present 5 Sign of the signal is incorrect 6 A track signal is missing 7 Incorrect gain 8 Incorrect pulse number Checking the measurement cables. Checking the parameters • P130 Src Speed ActV • P151 Encoder Pulse #

Fault number	Fault	Counter-measure
F100	**GRND Init** During the ground fault test, a current not equal to zero has been measured, or an UCE or overcurrent monitoring has responded, although no valve has yet been triggered.	The cause of the fault can be read out from r376 "GrdFltTestResult". Check the converter output for short-circuit or ground fault (-X2:U2, V2, W2 – including motor). Check that the CU is inserted correctly. Sizes 1 and 2: • Check the transistor modules on the PEU board -A23 for short-circuit. Size 3 and 4: • Check the transistor modules -A100, -A200, -A300 for short-circuit
F101	**GRND UCE** During the ground fault test, the UCE monitoring has responded in a phase in which no valve has been triggered.	Check valves in the power section for short-circuit, and on converters with fiber-optic gating, check the gating unit wiring and the UCE checkbacks for correct assignment. r376 can be interrogated to indicate which UCE monitoring has responded.
F102	**GRND Phase** During the ground fault test, a current flows in a phase in which no valve has been triggered or the UCE monitoring has responded in the phase in which the valve has been triggered.	The fault value can be read out from r949. The digit of the xth position indicates the valve where the fault occurred at power-up 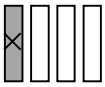 x = 1 = V+ x = 2 = V- x = 3 =U+ x = 4 = U- x = 5 = W+ x = 6 =W- The figure of the xth digit indicates the phase in which I ≠ 0 and thus a valve must be defective (always conductive). 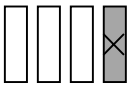 x = 1 = Phase 1 (U) x = 3 = Phase 3 (W) x = 4 = Phase 1 (U) or 3 (W) Examine phase for defective valves (always conductive).
F103	**Ground fault** There is a ground fault or a fault in the power section. During the ground fault test, a current flows from the phase in which a valve has been triggered, the overcurrent comparator has responded, or a UCE monitoring has responded in a phase in which a valve has been triggered.	Read out fault value from r949. The digit of the xth position indicates the valve where the fault occurred at power-up. 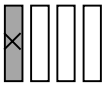 x = 1 = V+ x = 2 = V- x = 3 =U+ x = 4 = U- x = 5 = W+ x = 6 =W- Check the motor including the feeder cable for short-circuit. If no ground fault is present, check the power section for defective valves (always conductive). The digit of the xth position indicates the phase in which I ≠ 0 and therefore a valve must be defective (always conductive).

Fault number	Fault	Counter-measure
		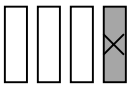 1 = Current in phase 1 (U) 2 = UCE in phase 2 (V) 1) 3 = Current in phase 3 (W) 4 = Only overcurrent occurred The speed of the motor shaft during the ground fault test should be less than 10 % of the nominal speed! 1) A ground fault or a defective valve (aways conductive) is present in phase V or the switch for 'SAFE OFF' (X9/5-6) is open (only for units with Order No. ...-11, ...-21,...-31).
F107	**MId I = 0** A fault has occurred during the test pulse measurement.	Read out fault value from r949. The figures of the grey shaded areas indicate which fault has occurred. 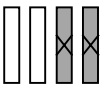 xx = 01: Both current actual values remain 0 xx = 02: Motor-converter cable phase U interrupted xx = 03: Motor-converter phase V interrupted xx = 04: Motor-converter phase W interrupted xx = 05: Current actual value I1 remains 0 xx = 06: Current actual value I3 remains 0 xx = 07: Valve U+ does not trigger xx = 08: Valve U- does not trigger xx = 09: Valve V+ does not trigger xx = 10: Valve V- does not trigger xx = 11: Valve W+ does not trigger xx = 12: Valve W- does not trigger xx = 13: Sign I1 incorrect xx = 14: Sign I3 incorrect xx = 15: Sign I1 and I3 incorrect xx = 16: I1 confused with I3 xx = 17: I1 confused with I3 and both currents have an incorrect sign The digit of the grey shaded area indicates where the fault has occurred. 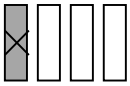 x = 0 = Single converter x = 1 = Inverter 1 x = 2 = Inverter 2 x = 3 = Inverters 1 and 2 Check that all 3 motor feeder cables and the motor windings do not have any interruption. Check the connection between the current converter and the electronics and check the current converter itself. Check the correct input of the rating plate data for the motor data set valid during the measurement.

Fault number	Fault	Counter-measure
F108	**MId Unsym** During the DC measurement, the measurement results for the individual phases differ significantly. The fault value indicates which quantity(ies) is (are) concerned and in which phase the greatest deviation occurred.	Read out fault value from r949. The digit of the xth position indicates; 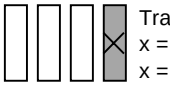 Transverse voltage too high x = 1 = phase R; x = 2=phase S; x = 3 = phase T 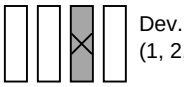 Dev. stator resistance (1, 2, 3 as above) 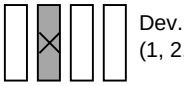 Dev. rotor resistance (1, 2, 3 as above) 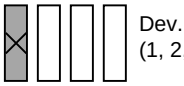 Dev. dead-time compensation (1, 2, 3 as above) 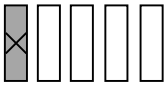 Deviation valve voltage (1, 2, 3 as above) The motor, power section or actual-value sensing are significantly non-symmetrical.
F109	**MId R(L)** The rotor resistance determined during DC measurement deviates too significantly from the value which was calculated by the automatic parameterization from the rated slip.	• Incorrect input of rated speed or rated frequency • Pole pair number incorrect
F110	**MId di/dt** During test pulse measurement, the current has increased significantly faster than was expected. Thus for the 1st test pulse, an overcurrent condition occurred within the first half of the minimum switch-on time.	• There may be a short-circuit between two converter outputs. • The motor rating plate data have not been correctly parameterized. • The motor leakage is too low.
F111	**Fault e_Func** A fault has occurred while calculating the equalization function.	
F112	**Unsym l_sigma** The individual leakage test results deviate too significantly.	
F114	**MId OFF** The converter has automatically aborted the automatic measurement as the time limit was exceeded up to converter power-up, or due to an OFF command during the measurement; the selection in P115 Function Select is reset.	For P115 Function Select = 2 restart "Motor data identification at standstill". The ON command must be provided within 20 s after the alarm message A078 = standstill measurement appears. Withdraw the OFF command, and restart the measurement.
F115	**KF internal**	Power-down the converter and electronics and power-up again.
F148	**Fault 1 Function blocks**	Check cause of fault, see function diagram 710

Fault number	Fault	Counter-measure
F149	**Fault 2 Function blocks**	Check cause of fault, see function diagram 710
F150	**Fault 3 Function blocks**	Check cause of fault, see function diagram 710
F151	**Fault 4 Function blocks**	Check cause of fult, see function diagram 710
F243	**Link int.** Faults in internal linking. One of the two linked partners does not reply.	Replace CU (-A10).
F244	**ParaLink int.** Fault in the internal parameter linking	Release comparison of MWH software and CU software regarding the transfer parameters. Replace CU (-A10).
F255	**Fault in the EEPROM**	Switch off the unit and power it up again. If it occurs again, replace the CU.

Table 11-1 Fault numbers, causes and their counter-measures

Alarms

The alarm message is periodically displayed on the PMU by A = alarm/ alarm message and a 3-digit number. An alarm cannot be acknowledged. It is automatically deleted once the cause has been eliminated. Several alarms can be present. The alarms are then displayed one after the other.

When the converter is operated with the OP1S operator control panel, the alarm is indicated in the lowest operating display line. The red LED additionally flashes (refer to the OP1S operating instructions).

Alarm number	Param. No. / Bit No.	Cause	Counter-measure
A001	r953 / 0	**Calculating time** The CUVC board calculating time utilization is too high	• Observe r829 CalcTimeHdroom • Increase P357 Sampling Time or • Reduce P340 Pulse Frequency.
A002		**SIMOLINK start alarm**	Check • the fiber-optic cable ring • whether there is an SLB without voltage in the ring • whether there is a faulty SLB in the ring • P741 (SLB Tlg OFF)
A014	r953 / 13	**Simulation active alarm** The DC link voltage is not equal to 0 when the simulation mode is selected. (P372 = 1)	• Set P372 to 0 • Reduce DC link voltage (disconnect the converter from the supply)
A015	r953 / 14	**External alarm 1** Parameterizable external alarm input 1 has been activated	Check • Whether the cable to the corresponding digital input is interrupted. • Parameter P588 Src No Ext Warn1
A016	r953 / 15	**External alarm 2** Parameterizable external alarm input 2 has been activated	Check • Whether the cable to the corresponding digital input is interrupted. • Parameter P589 Src No Ext Warn2
A017	r954 / 0	**SAFE OFF alarm active** The switch for blocking the inverter pulses (X9 terminal 5-6) has been opened (only for units with Order No. ...-11, ...-21,...-31,...-61).	Close switch X9 5-6 and thus release the inverter pulses.
A020	r954 / 3	**Overcurrent** An overcurrent condition has occurred.	Check the driven load for an overload condition. • Are the motor and the converter matched? • Have the dynamic performance requirements been exceeded?
A021	r954 / 4	**Overvoltage** An overvoltage condition has occurred.	Check the supply voltage. The converter regenerates without regeneration possibility.

Alarm number	Param. No. / Bit No.	Cause	Counter-measure
A022	r954 / 5	**Inverter temperature** The threshold for initiating an alarm has been fallen short of.	• Observe r833 Drive Tmp. Measure intake air or ambient temperature. Observe reduction curves at ϑ >40 ºC . Check: • Whether the fan -E1 is connected and is rotating in the correct direction. • The air intake and discharge openings for blockage. • The temperature sensor at -X30.
A023	r954 / 6	**Motor temperature** The parameterizable threshold for initiating an alarm has been exceeded.	Check the motor (load, ventilation, etc.). The current temperature can be read in r009 Motor Tmp. Check the KTY84 input at connector X103:29,30 for short-circuit.
A024	r954 / 7	**Motor movement** The motor has moved during motor data identification in first start-up.	Lock the motor
A025	r954 / 8	**I2t Inv.** If the instantaneous load condition is maintained, then the inverter will be thermally overloaded.	Motor load cycle exceeded! Check the parameters: P382 Motor Cooling P383 Mot Tmp T1 P384 Mot Load Limits
A029	r954 / 12	**I2t motor** The parameterized limit value for the I2t monitoring of the motor has been exceeded.	Motor load cycle is exceeded! Check the parameters: P382 Motor Cooling P383 Mot Tmp T1 P384 Mot Load Limits
A033	r955 / 0	**Overspeed** Bit 3 in r553 status word 2 of the setpoint channel. The speed actual value has exceeded the value of maximum speed plus the set hysteresis.	P804 Overspeed Hyst plus P452 n/f(max, FWD Spd) or P453 n/f(max,REV Spd) has been exceeded. Increase the parameter for the maximum frequencies or reduce the regenerative load.
A034	r955 / 1	**Setpoint/actual value deviation** Bit 8 in r552 status word 1 of setpoint channel. The difference between frequency setpoint/actual value is greater than the parameterizable value and the control monitoring time has elapsed.	Check: • Whether an excessive torque requirement is present. • Whether the motor has been dimensioned too small. Increase values P792 Perm Deviation Frq/ set/actual DevSpeed and P794 Deviation Time

Alarm number	Param. No. / Bit No.	Cause	Counter-measure
A035	r955 / 2	**Wire break** The clockwise and/or the counter-clockwise rotating field is not enabled, or a wire breakage is present in the terminal wiring (both control word bits are zero)	Check whether cable(s) to the corresponding digital input(s), P572 Src REV Speed/ P571 Src FWD Speed is (are) interrupted or released.
A036		**Brake checkback "Brake still closed“**	Check the brake checkback (see FD 470)
A037		**Brake checkback "Brake still open"**	Check brake checkback (see FP 470)
A041	r955 / 8	**Vdmax controller inhibit** The line voltage is too high or the drive line voltage (P071) is incorrectly parameterized. The Vdmax controller is disabled despite parameter access (P515), as otherwise the motor would accelerate immediately in operation to the maximum frequency.	Check: • Line voltage • P071 Line Volts
A042	r955 / 9	**Motor stall/lock** Motor is stalled or locked. The alarm cannot be influenced by P805 “ PullOut/BlckTime”, but by P794 “Deviation Time”.	Check: • Whether the drive is locked. • Whether the encoder cable is interrupted during speed control and whether the shield is connected. • Whether the drive has stalled. • For synchronous motors (P095=12): excitation current injection
A043	r955 / 10	**n-act jump** The permissible change value of the speed encoder signal (P215) has been exceeded. Additionally for synchronous motors (P095=12): The motor rotates with more than 2 % of the rated speed at the time of inverter release. The inverter status "Ready for operation" is not exited.	Check the tachometer cables for interruptions. Check the earthing of the tachometer shield. • The shield must be connected both on the motor and on the converter side. • The encoder cable must not be interrupted. • The encoder cable must not be laid with the power cables. • Only the recommended encoders should be used. • If there is a signal fault, use the DTI board if necessary. If necessary, change P215 • Additionally for synchronous motors (P095=12): Do not grant inverter release until the motor is at standstill.

Alarm number	Param. No. / Bit No.	Cause	Counter-measure
A044	r955 / 11	**I too low** Only for synchronous motors (P095=12) in operation: The difference smoothed with P159 between excitation current setpoint and actual value (r160 - r156) deviates from zero by more than 25 % of the rated magnetizing current.	Only for synchronous motors P095 = 12 Check: • Whether the current limitation of the excitation current control is too small. • Whether the dynamic performance of the excitation current injection is too low. • Whether the excitation current injection function is operating, • Whether the wiring of excitation current actual-value P155 is correct, • Whether the wiring of excitation current setpoint r160 is correct, • Whether there is a wire breakage between MASTERDRIVES and the excitation device. • Whether the voltage limitation is too low for dynamic excitation current control. • Whether the analog output for r160 takes place without isolating amplifiers (despite cable length > 4m).
A045	r955 / 12	**DC braking activated** The DC braking function has been activated and the motor frequency is still above the frequency at which DC braking begins (P398).	• Increase frequency at which DC braking begins.
A049	r956 / 0	**No slave** At ser. I/O (SCB1 with SCI1/2) no slave is connected or fiber-optic cable is interrupted or slaves are without voltage.	**P690 SCI AnaIn Conf** • Check slave. • Check cable.
A050	r956 / 1	**Slave incorrect** At ser. I/O the slaves required according to a parameterized configuration are not present (slave number or slave type).	Check **P690 SCI AnaIn Conf**
A051	r956 / 2	**Peer Bdrate** In a peer-to-peer connection, a baud rate has been selected which is too high or too different.	Adjust the baud rate in conjunction with the SCB boards P701 SCom/SCB Baud Rate
A052	r956 / 3	**Peer PcD L** In a peer-to-peer connection, a PcD length has been set which is too high (>5).	Reduce number of words P703 SCom PcD #.
A053	r956 / 4	**Peer Lng f.** In a peer-to-peer connection, the PcD length of transmitter and receiver do not match.	Adjust the word length for transmitter and receiver P703 SCom/SCB PcD #

Alarm number	Param. No. / Bit No.	Cause	Counter-measure
A057	r956 / 8	**TB Param** Occurs when a TB is logged on and present, but parameter tasks from the PMU, SCom1 or SCom2 are not answered by the TB within 6 seconds.	Replace TB configuration (software).
A061		**Alarm 1 function blocks**	Check cause of alarm (see FP 710)
A062		**Alarm 2 function blocks**	Check cause of alarm (see FP 710)
A063		**Alarm 3 function blocks**	Check cause of alarm (see FP 710)
A064		**Alarm 4 function blocks**	Check cause of alarm (see FP 710)
A065	r957 / 0	**Auto restart active** The auto restart option (P373) restarts the drive. A possibly parameterized power-up delay time (P374) expires if flying restart is not selected. During pre-charging of the DC link, there is no time monitoring i.e. with an external electronics power supply, it is also switched-in again.	**Caution!** Personnel could be in danger when the drive automatically restarts. Check whether the auto restart function is really required!
A066	r957 / 1	**fsyn > fmax** The measured target frequency of the external converter (or supply) is greater than the parameterized maximum frequency of the synchronizing converter.	Check: • P452 n/f(max, FWD Spd)/ P453 n/f(max,REV Spd) are correct and • Correct motor data set P578 Src MotDSet Bit0 are selected.
A067	r957 / 2	**fsyn < fmin** The measured target frequency of the external converter (or supply) is less than the minimum frequency required for synchronizing.	Check: • r533 Sync Target Freq • Synchronising cable
A068	r957 / 3	**fsyn<>fsoll** The setpoint frequency of the synchronizing converter deviates too significantly from the measured target frequency of the external converter (or supply). The permissible deviation can be set in P529.	Adjust total setpoint (main and additional setpoints) to the target frequency displayed in visualization parameter r533.
A069	r957 / 4	**RGen active** Synchronizing is not started as long as the ramp-function generator in the synchronizing converter setpoint channel is active. This alarm is only output if synchronizing is selected.	Wait until acceleration has been completed. Check whether: • P462 Accel Time • P463 Accel Time Unit has been correctly set.

Alarm number	Param. No. Bit No.	Cause	Counter-measure
A070	r957 5	**Sync. Error** This alarm is output if the phase difference goes outside the synchronizing window (P 391) after successful synchronization.	The alarm can only be deleted after synchronization has been exited.
A071	r957 6	**TSY missing** An attempt was made to start synchronization with either the synchronizing board not inserted or not parameterized.	Insert the TSY board in the subrack.
A076	r957 11	**t-comp lim** The determined compensation time was limited to the value range of 0.5µs - 1.5µs.	The converter output and the motor output are too different. Check motor data entries P095 to P109.
A077	r957 12	**r-g limit** The measured resistance was limited to the maximum value of 49 %.	Converter output and motor output are too different. Check motor data entries P095 to P109.
A078	r957 13	**Stands. Meas** The standstill measurement is executed when the converter is powered-up. With this measurement, the motor can align itself in any direction of rotation.	If the standstill measurement can be executed without any danger: • Power up the converter
A079	r957 14	**MId Inv Stop** The rotating measurement has been aborted or cannot commence because an inverter stop command is present.	P561 Src InvRelease – Release the inverter or re-start the measurement by powering-up the converter.
A080	r957 15	**MotId:Dr.M.** When the converter is powered-up, the rotating measurement automatically accelerates the drive. The drive can then only be externally controlled in a very restricted fashion.	If the rotating measurement can be executed without any danger: • Power-up the converter
A081.. A096	r958 1...15	**CB alarm** See user manual for CB board	
A097.. A112	r959 1...15	**TB alarm 1** See user manual for TB board	
A113.. A128	r960 1...15	**TB alarm 2** See user manual for TB board	

Table 11-2 Alarm numbers, causes and their counter-measures

Fatal errors (FF)

Fatal errors are serious hardware or software errors which no longer permit normal operation of the unit. They only appear on the PMU in the form "FF<No>". The software is re-booted by actuating any key on the PMU.

FFxx	Error message	Power-down the converter and power-up again. Call the service personnel if a fatal error message is displayed again
FF01	**Time slot overflow** A non-removable time sector overflow was identified in the higher priority time sectors.	• Increase sampling time (P357) or reduce pulse frequency (P340) • Replace CU
FF03	**Access error, optional board** Fatal errors occurred when accessing external optional boards (CB, TB, SCB, TSY ..)	• Replace CU • Replace LBA • Replace optional board
FF06	**Stack overflow** Overflow of the stack.	• Increase sampling time (P357) or reduce pulse frequency (P340) • Replace CU
FFxx	**Other fatal errors**	• Replace CU
E	**Fatal hardware errors**	• Replace CU
EEEE	**Fatal firmware errors**	• Replace CU • Re-load firmware

Table 11-3 Fatal errors

12 Maintenance

WARNING

SIMOVERT MASTERDRIVES units are operated at high voltages.
All work carried out on or with the equipment must conform to all the national electrical codes (VBG 4 in Germany).
Maintenance and service work may only be executed by qualified personnel.

Only spare parts authorized by the manufacturer may be used.
The prescribed maintenance intervals and also the instructions for repair and replacement must be complied with.
Hazardous voltages are still present in the drive units up to 5 minutes after the converter has been powered down due to the DC link capacitors. Thus, the unit or the DC link terminals must not be worked on until at least after this delay time.
The power terminals and control terminals can still be at hazardous voltage levels even when the motor is stationary.

If it is absolutely necessary that the drive converter be worked on when powered-up:

- Never touch any live parts.
- Only use the appropriate measuring and test equipment and protective clothing.
- Always stand on an ungrounded, isolated and ESD-compatible pad.

If these warnings are not observed, this can result in death, severe bodily injury or significant material damage.

12.1 Replacing the fan

The fan is designed for an operating time of 35 000 hours at an ambient temperature of T_U = 40 °C. It should be replaced in good time to maintain the availability of the unit.

The units have a fan which operates as soon as the unit is connected to the voltage supply.

Construction types A to C

The fan is located on the bottom of the unit.

Replace the fan as follows:

- Undo the two M4x49 Torx screws
- Pull out the protective cover together with the fan from underneath
- Withdraw fan connector X20
- Install the fan in reverse sequence.

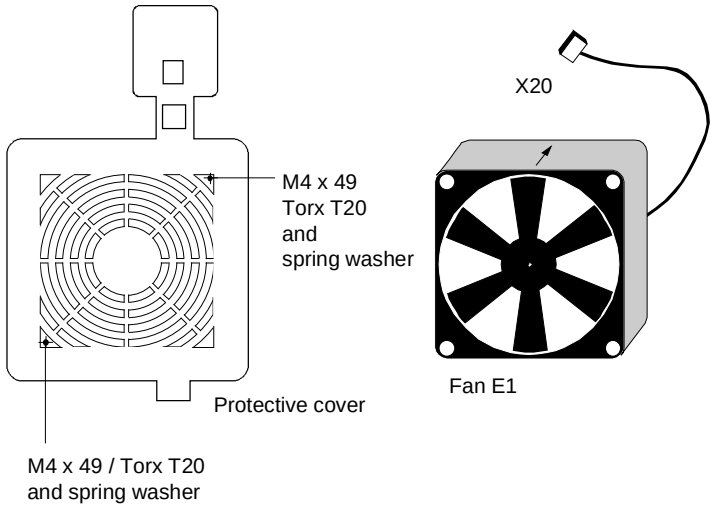

Fig. 12-1 Cover and fan for housing size A to C

Construction type D

The fan is screwed onto a bracket and is located at the bottom section of the unit.

Replace the fan as follows:

- Withdraw fan connector X20.
- Unscrew the two M5x16 Torx screws at the bottom of the unit.
- Pull the bracket out of the unit from underneath.
- Unscrew the M4 fan screws.
- Install the fan in reverse sequence.

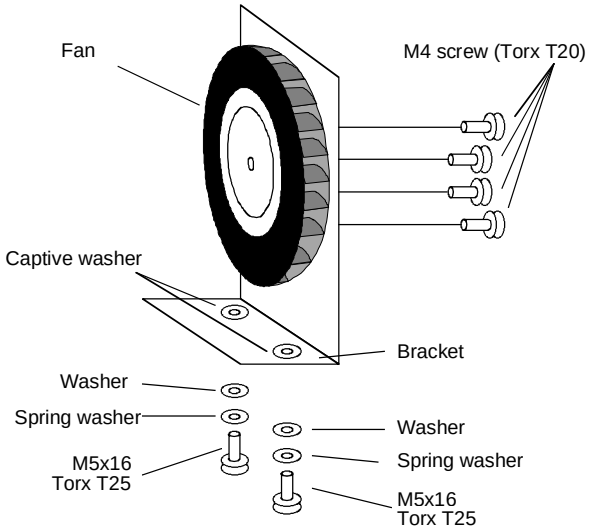

Fig. 12-2 Fan with bracket for housing size D

Replacing the fan fuse (type D)

The fuses are located in the upper section of the unit in a fuse holder. You have to open the fuse holder to replace the fuses.

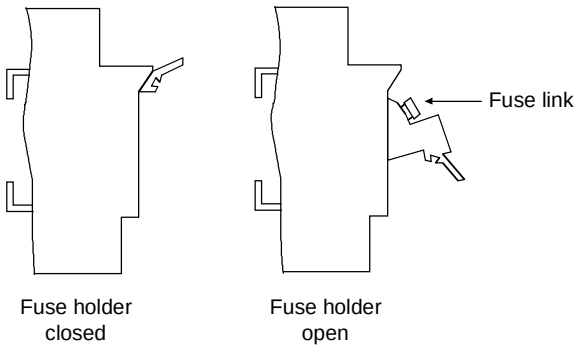

Fig. 12-3 Fuse holder for housing size D

12.2 Replacing the PMU

Replacing the PMU

- Turn the snaps on the front cover by 90 °
- Open up the front cover
- Withdraw connector X108 on the CU (Control Unit)
- Remove ribbon cable from the guide hooks
- Carefully press the snap catches upwards on the inner side of the front cover using a screwdriver
- Tilt the PMU and remove it
- Install new PMU in reverse sequence.

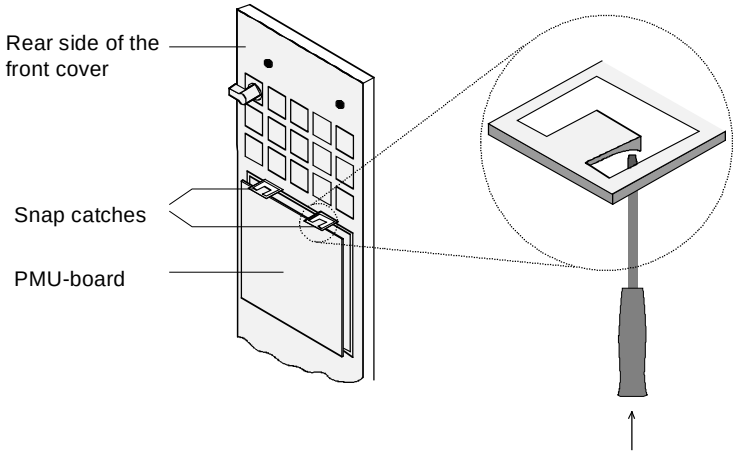

Fig. 12-4 Replacing the PMU

12.3 Replacing the DC link fuses

Construction types A and B

The DC link fuses are not accessible on types A and B. They must therefore only be replaced by the service personnel.

Construction types C and D

The position of the fuses can be seen from the relevant block diagram.

Procedure:

- ♦ Remove side plate
- ♦ Replace the defective fuses:
  - Fuses F1 and F2 on type C
  - Fuses F1, F3 or F1 to F4 on type D

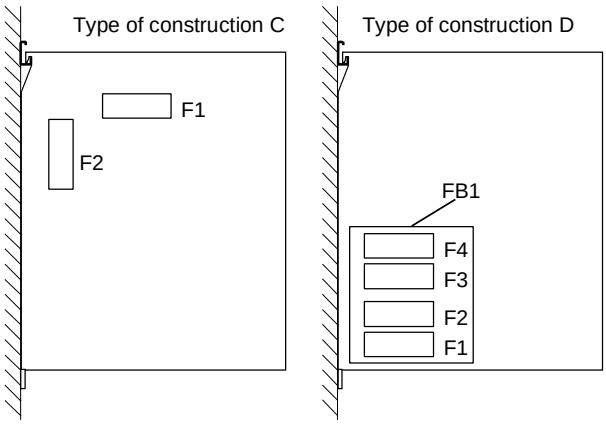

Fig. 12-5 Position of the DC link fuses

Replacement fuses

Inverter MLFB	Fuse	Part ID	Fuse order number
6SE7022-2UC61	50 A, 700 V	F1, F2	6SY7000-0AC74
6SE7026-0TD61 6SE7027-2TD61	80 A, 700 V	F1, F2, F3, F4	6SY7000-0AC73
6SE7022-6TC61 6SE7023-4TC61	100 A, 700 V	F1, F2	6SY7000-0AC72
6SE7023-8TD61 6SE7024-7TD61 6SE702_-_UD61	100 A, 700 V	F1, F3	6SY7000-0AC72

13 Forming

If a unit has been non-operational for more than one year, the DC link capacitors have to be newly formed. If this is not carried out, the unit can be damaged when the line voltage is powered up.

If the unit was started-up within one year after having been manufactured, the DC link capacitors do not have to be re-formed. The date of manufacture of the unit can be read from the serial number.

How the serial number is made up

(Example: A-H60147512345)

Digit	Example	Significance
1 and 2	A-	Place of manufacture
3	H	1996
	J	1997
	K	1998
4	1 to 9	January to September
	O	October
	N	November
	D	December
5 to 14		Not relevant for forming

The following applies for the above example:
Manufacture took place in June 1997.

During forming, the DC link of the unit is connected up via a rectifier, a smoothing capacitor and a resistor.

As a result, the DC link capacitors receive a defined voltage and a limited current, and the internal conditions necessary for the function of the DC link capacitors are restored.

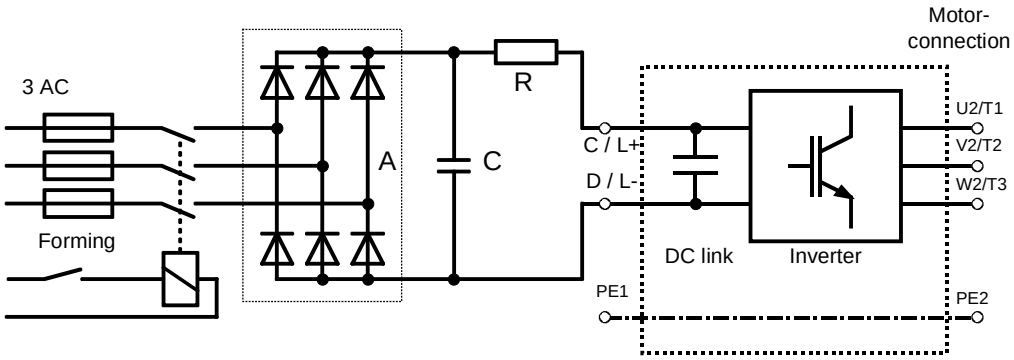

Fig. 13-1 Forming circuit

Components for the forming circuit (suggestion)

Vn	A	R	C
DC 270 V to 310 V	SKD 50 / 12	220 Ω / 100 W	22 nF / 1600 V
DC 510 V to 650 V	SKD 62 / 16	470 Ω / 100 W	22 nF / 1600 V
DC 675 V to 810 V	SKD 62 / 18	680 Ω / 100 W	22 nF / 1600 V

Procedure

- Before you form the unit, all DC link connections must be disconnected.
- The converter incoming power supply must be switched off.
- Connect the required components in accordance with the circuit example.
- Energize the forming circuit. The duration of forming depends on the idle time of the inverter.

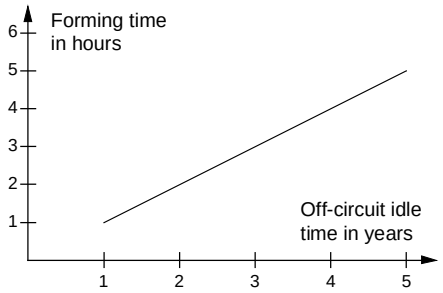

Fig. 13-2 Forming time as a function of converter idle time

14 Environmental Friendliness

Environmental aspects during the development

The number of components has been significantly reduced over earlier converter series by the use of highly integrated components and the modular design of the complete series. Thus, the energy requirement during production has been reduced.

Special significance was placed on the reduction of the volume, weight and variety of metal and plastic components.

Plastic components

PC: Front cover

ABS: Fan mesh, PMU support board , Logo

PP: Hinges, Insulating board, Handle, Bus retrofit

PA6: Insulating foils, Terminal housing, Support

Halogen-containing flame retardants were, for all essential components, replaced by environmentally-friendly flame retardants.

Environmental compatibility was an important criterium when selecting the supplied components.

Environmental aspects during production

Purchased components are generally supplied in recyclable packaging materials (board).

Surface finishes and coatings were eliminated with the exception of the galvanized sheet steel side panels.

ASIC devices and SMD devices were used on the boards.

The product is emission-free.

Environmental aspects for disposal

The unit can be broken-down into recyclable mechanical components as a result of the easily releasable screw- and snap connections.

The plastic components and moulded housing are to DIN 54840 and have a recycling symbol.

Units can be disposed of through certified disposal companies. Addresses are available from your local Siemens partner.

15 Certificates

SIEMENS Automation and Drives

Confirmation

Erlangen, 01.05.1998

This confirms that

Equipment	AC drive converter
• Type	SIMOVERT MASTERDRIVES
• Order No.:	6SE70...

is manufactured in conformance with DIN VDE 0558, Part 2 and EN 60204, Part 6.2 (≙ DIN VDE 0113, Part 6.2).

This equipment fulfills the protection requirements against electric shock according to DIN VDE 0106 Part 100 when the following safety rules are observed:

- Service work in operation is only permissible at the electronics box
- The converter must be switched into a no-voltage condition and isolated from the supply when replacing any part/component
- All panels must be closed during operation.

Thus, this equipment conforms to the appropriate regulations in Germany according to VBG 4 §2 (2) (VBG is a German regulatory body for safety-related issues).

The local operating regulations (e.g. EN 50110-1, EN 50110-2) must be observed when operating the equipment.

A&D DS A P1

Mickal

SIEMENS Automation and Drives

Test certificate

Erlangen, 01.05.1998

Equipment AC drive converter

- Type: SIMOVERT MASTERDRIVES
- Order No.: 6SE70... [1)]

The 100% inspection was performed according to test instructions

475 100.9000.00 QP type A - D
476 100.9000.00 QP type E - G
476 200.9000.00 QP type J - L

Test scope:		
	I. Insulation test	• refer to EN 50178, Part 9.4.5.2 and UL508/CSA 22.2-14.M 91, Part 6.8
	II. Function test acc. to EN 50178	• Initialization and start-up • Customer terminal test • Power section inspection • Inspection of protection and monitoring equipment
	III. RUN-IN	• Continuous test > 5 hours ambient temperature 55 °C
	IV. Function test acc. to EN 50178	• see II. function test

The equipment complied with the test requirements.
The test results are documented within the test data base

1) For complete type, serial number and technical data please see rating plate.

A&D DS A PE D P

Schlögel

SIEMENS

Factory certificate *

regarding electromagnetic compatability

4SE.475 000 0001.00 WB EMV

Manufacturer:	Siemens Aktiengesellschaft
	Drives and Standard Products Group
	Business Division Automation and Drives
	Sub-Division AC-Drive systems
Address:	P.O. Box 3269
	D-91050 Erlangen
Product name:	SIMOVERT Type 6SE70Compact drive converters AC-AC and DC-AC

When correctly used, the designated product fulfills all the requirements of Directive 89/336/EEC regarding electromagnetic compatibility.

We confirm the conformance of the above designated product with the Standards:

EN 61800-3 10-1996

EN 61000-4-2 (old IEC 801-2)

EN 61000-4-4 (old IEC 801-4)

EN 61000-4-5 (old IEC 801-5)

IEC 1000-4-3 (old IEC 801-3)

EN 55011 (DIN VDE 0875 Part 11)

Note:

These instructions relating to EMC-correct installation, correct operation, connecting-up conditions and associated instructions in the product documentation supplied must be observed.

Erlangen, 01.05.1998

H. Mickal
A&D DS A P1

*) acc. to EN 10204 (DIN 50049)

This declaration does not guarantee any features.

A&S DS 4102x Copyright (©) SIEMENS AG 1997 All rights reserved

Bisher sind folgende Ausgaben erschienen:

Ausgabe	Interne Sachnummer
AA	475 844 4170 76 J AA-74
AB	475 844 4170 76 J AB-74

Ausgabe AB besteht aus folgenden Kapiteln:

Kapitel		Änderungen	Seitenzahl	Ausgabedatum
1	Definitionen und Warnungen	überarbeitete Ausgabe	4	04.98
2	Beschreibung	überarbeitete Ausgabe	1	04.98
3	Transportieren, Lagern, Auspacken	überarbeitete Ausgabe	1	04.98
4	Technische Daten	überarbeitete Ausgabe	10	04.98
5	Montage	überarbeitete Ausgabe	5	04.98
6	EMV-gerechter Aufbau	überarbeitete Ausgabe	2	04.98
7	Anschließen	überarbeitete Ausgabe	12	04.98
8	Parametrierung	überarbeitete Ausgabe	9	04.98
9	Parametrierschritte	überarbeitete Ausgabe	49	04.98
10	Erstinbetriebsetzung	überarbeitete Ausgabe	2	04.98
11	Störungen und Warnungen	überarbeitete Ausgabe	23	04.98
12	Wartung	überarbeitete Ausgabe	5	04.98
13	Formieren	überarbeitete Ausgabe	2	04.98
14	Umweltverträglichkeit	überarbeitete Ausgabe	1	04.98
15	Bescheinigungen	überarbeitete Ausgabe	3	04.98

The following editions have been published so far:

Edition	Internal Item Number
AA	475 844 4170 76 J AA-74
AB	475 844 4170 76 J AB-74

Version AB consists of the following chapters:

Chapter		Changes	Pages	Version date
1	Definitions and Warnings	reviewed edition	4	04.98
2	Description	reviewed edition	1	04.98
3	Transport, Storage, Unpacking	reviewed edition	1	04.98
4	Technical Data	reviewed edition	10	04.98
5	Installation	reviewed edition	5	04.98
6	Installation in Observance of EMC Regulations	reviewed edition	2	04.98
7	Connecting-up	reviewed edition	12	04.98
8	Parameterization	reviewed edition	9	04.98
9	Parameterizing steps	reviewed edition	49	04.98
10	First Start-up	reviewed edition	2	04.98
11	Faults and Warnings	reviewed edition	23	04.98
12	Maintenance	reviewed edition	5	04.98
13	Forming	reviewed edition	2	04.98
14	Environmental friendliness	reviewed edition	1	04.98
14	Certificates	reviewed edition	3	04.98

Group: Automation and Drives (A&D)
Division: Variable-Speed Drive Systems
Postfach 3269, D-91050 Erlangen

Siemens Aktiengesellschaft

Subject to change

Printed in the federal Republic of Germany
04.98